Maestrale Gazebo 10' X 14' (2017)

Assembly Instructions

B101419–

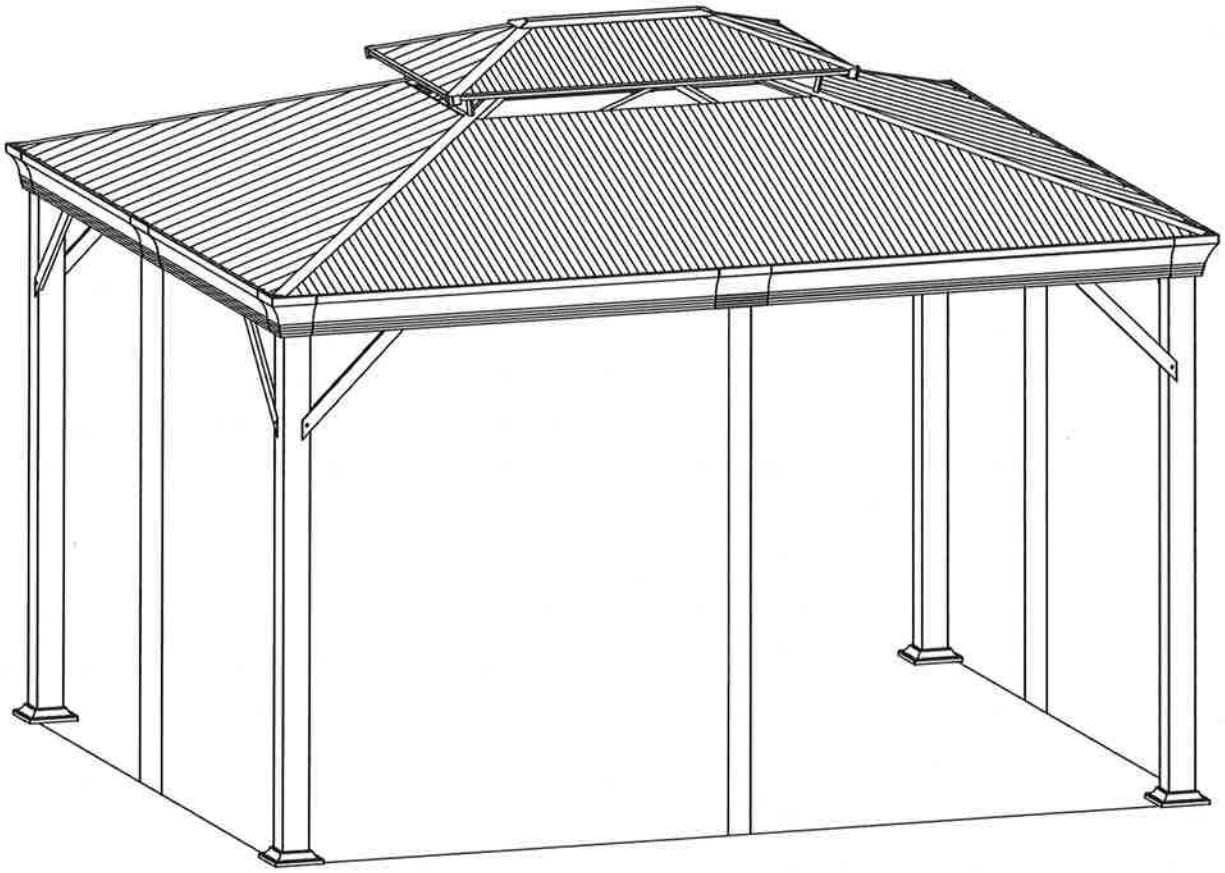

Security rules

Warning :

Keep away flame or heat source from gazebo fabrics. Otherwise fabrics can burn or melt and can cause severe burn on nearby persons. In this case, material damage has to be considered. Moreover, the adding of any substance will block or severly slow down capacity of fabric to resist or be flame retardant.

Regulation

It is the responsability of consumer being in accordance with city regulation, construction code, zoning or any limitations and obtaining permit prior erecting the gazebo.

Recommendation

Prior to proceed to erect the gazebo, a check-up of quantity of each items should be done. Some parts may have sharp edges, wearing gloves is recommended.

Figure at least five hours to complete the set-up with two persons. Consider having enough time for completion of erecting. Even well anchored, a non complete gazebo unit can get or create damage to nearby environment.

Keep away from any electric installation or transportation device.

A check up of tightening of all bolts should be done all across lifespan of gazebo.

Even if this gazebo is built for year round use, this is strongly recommended to remove snow from top.

Mosquito net and curtains (optional) must be removed from the unit at freezing period.

Instruction manual must be read prior start-up of erecting.

All recommendation must be followed carefully to ensure perfect sturdiness of the unit.

Use proper tools and equipements for a safe and compliant installation. Never climb, sit or stand on structure while erecting.

Anchoring bolts or other anchoring devices are not supplied.

Always recommended to keep instruction manual for further reference.

Care

Never use a high pressure washer. Use of mild soap in a lukewarm water is the best solution for frame only. A clear water rinse is necessary then. Never use soap for fabrics, this will reduce their capacity and consequently their lifespan and general look. For fabrics, a soft brush and a lukewarm water is offering an excellent cleaning.

Warranty

Covered

This gazebo is warranty from any manufacturing defect for one year at normal use. This limited warranty is for one year for parts only.

In any case a part is needed, please contact the seller giving description and pictures of defect.

Not covered

All damage caused by commercial use, improper care, neglected storage, unreasonable or abusive use, vandalism, chemical, freeze damage, extreme weather or act of God, rust, oxidation, stains, glass breakage, packaging and transportation fees for return. Normal discoloration and build-up of snow are not covered either.

Seller :

For each part request, please contact our customer service. It will need a description of problem, pictures and consumer invoice copy. Be aware full item code must appear on invoice to give fabricating period, color and right identification of part requested. This will ensure all proper information to proceed the request. Moreover, name of person in charge of the request must be written, name and address of seller (branch), e-mail address, fax and phone number.

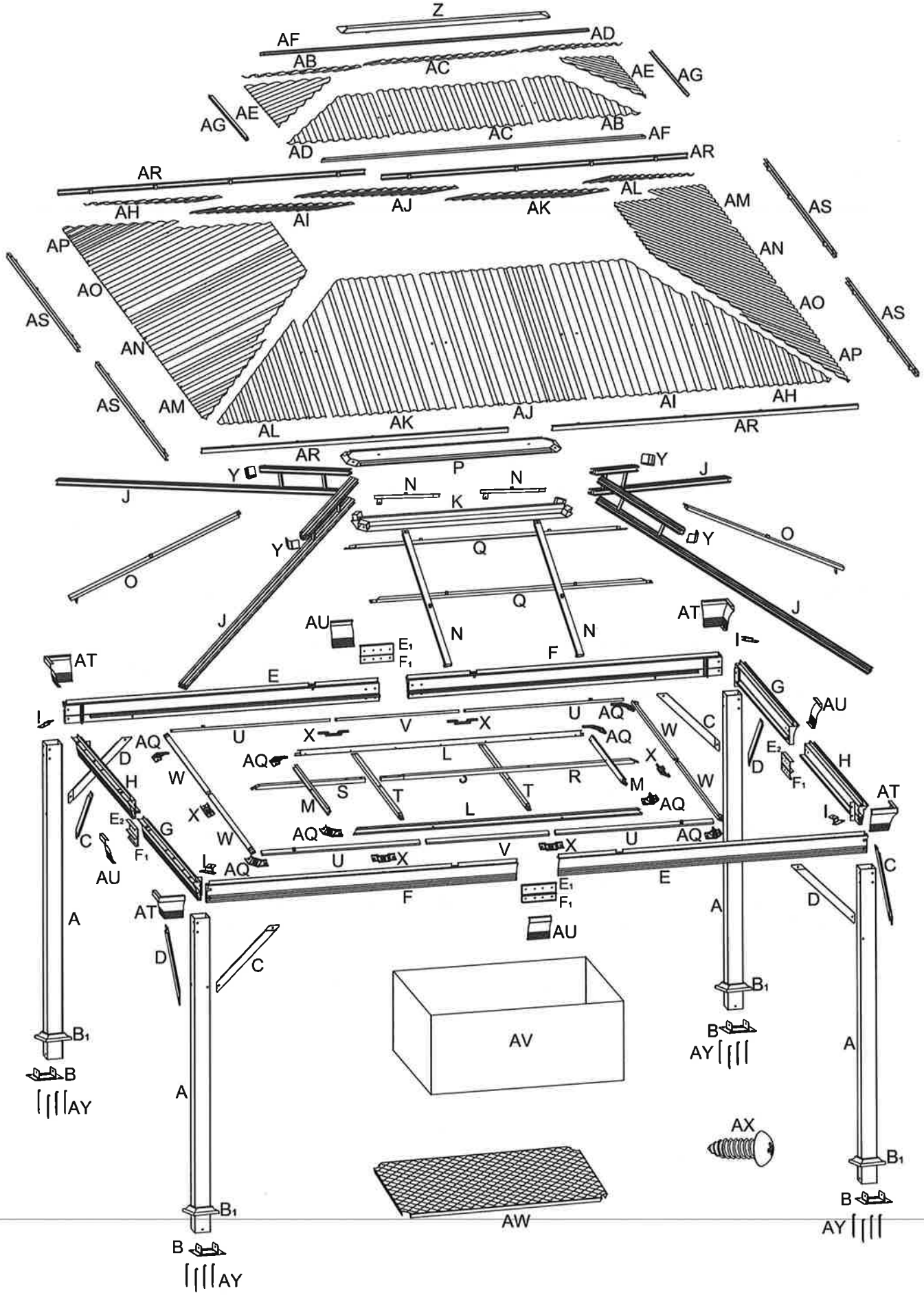
Z
AF
AD
AB
AC
AE
AG
AR
AH
AI
AJ
AK
AL
AM
AN
AO
AP
AS
P
Y
J
N
K
Q
O
AU
AT
E
F
E1
F1
I
G
U
V
X
W
C
D
H
E2
L
M
S
T
R
AQ
A
B1
B
AY
AV
AX
AW

Reminder: Before assembly, don't forget to check inside of each Post (No.A), some parts are well packed and stored inside.

A

The first Post (No. A) →

M	2pcs
N	2pcs
O	1pcs
U	4pcs
V	2pcs

A

The second Post (No. A) →

Q	2pcs
AG	2pcs
AR	4pcs
AS	4pcs

A

The third Post (No. A) →

N	2pcs
T	2pcs
O	1pcs
W	2pcs

A

The fourth Post (No. A) →

L	2pcs
R	1pcs
S	1pcs
W	2pcs

PARTS LIST:

NO.	Description	QTY	Drawing
A	Post	4	
B	Base flange	4	
B_1	Base Cap	4	
C	Corner supporter (Right)	4	
D	Corner supporter (Left)	4	
E	Long crossbar	2	
E_1	Connector	2	
E_2	Connector	2	
F	Long crossbar	2	
F_1	Connector	4	
G	Short crossbar	2	
H	Short crossbar	2	
I	Corner connector	4	

NO.	Description	QTY	Drawing
J	Corner roof tube	4	
K	Roof connector	1	
L	Roof support profile	2	
M	Roof support profile	2	
N	Middle roof tube	4	
O	Middle roof tube	2	
P	Middle connector	1	
Q	Upper roof supporting bar	2	
R	Upper roof support tube	1	
S	Upper roof support tube	1	
T	Upper roof support tube	2	
U	Middle roof support tube	4	
V	Middle roof support tube	2	

NO.	Description	QTY	Drawing
W	Middle roof support tube	4	
X	Middle connector	6	
Y	Air vent corner connector	4	
Z	Roof cap	1	
AB	Air vent panel	2	
AC	Air vent panel	2	
AD	Air vent panel	2	
AE	Air vent panel	2	
AF	Air vent profile	2	
AG	Air vent profile	2	
AH	Right roof panel for 14' side	2	
AI	Right roof panel for 14' side	2	
AJ	Middle roof panel for 14' side	2	

NO.	Description	QTY	Drawing
AK	Left roof panel for 14' side	2	
AL	Left roof panel for 14' side	2	
AM	Right roof panel for 10' side	2	
AN	Right roof panel for 10' side	2	
AO	Left roof panel for 10' side	2	
AP	Left roof panel for 10' side	2	
AQ	Corner connector	8	
AR	Eave profile	4	
AS	Eave profile	4	
AT	Corner moulding	4	
AU	Center moulding	4	
AV	Mosquito Net	1	
AW	Air vent Mosquito net	1	

NO.	Description	QTY	Drawing
AX	Self tapping screw	26	
AY	Stake	16	

Hardware Kit:

AA	Bolt M6 X 15mm	195	
BB	Bolt M6 X 30mm	18	
CC	Bolt M6 X 42mm	30	
DD	Plastic washer	18	
EE	Stainless washer	28	
FF	Allen key	1	
GG	Allen key	1	

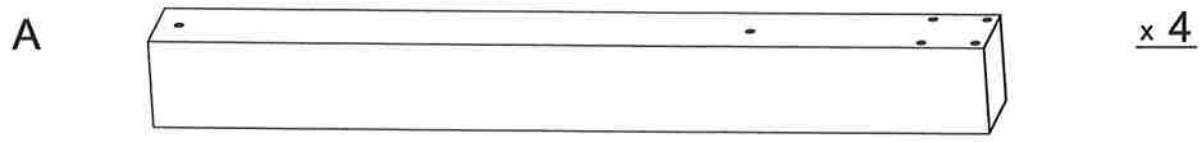

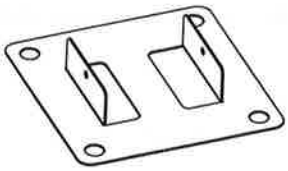

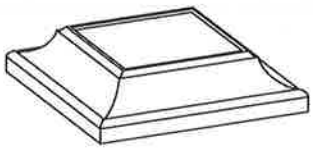

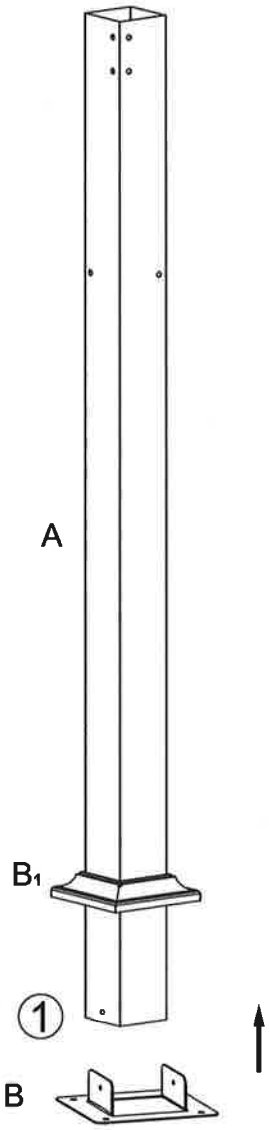

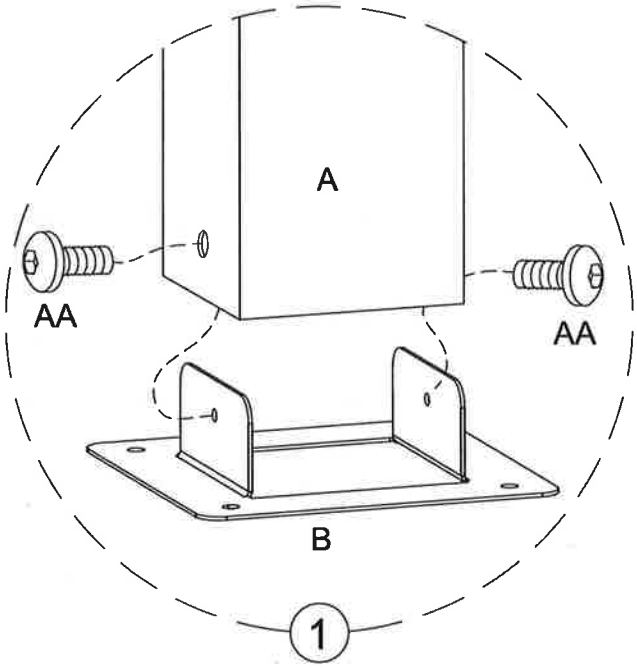

Step 1:

Insert base cap (B_1) into the bottom of the post (A), then using bolts (AA) secure base flange (B) on the bottom of post (A). Repeat the step for all rest posts. **Bolts can be tight completely.**

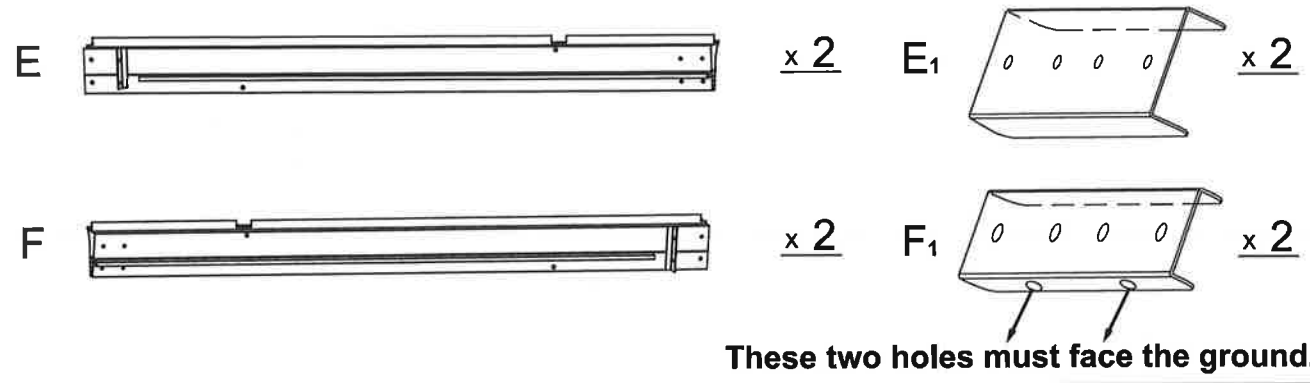

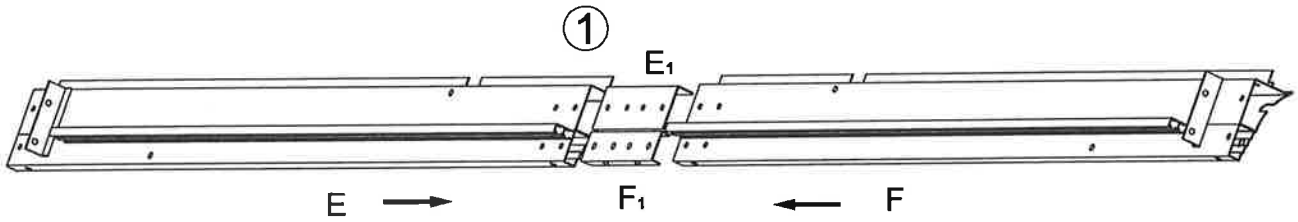

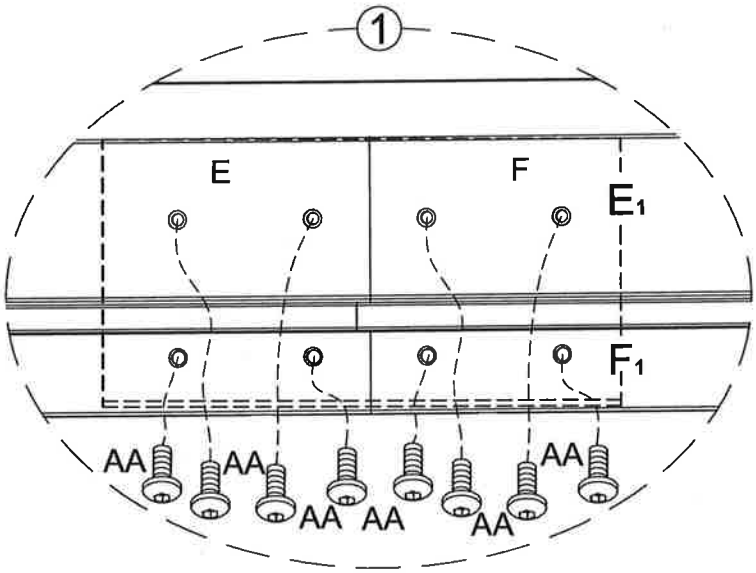

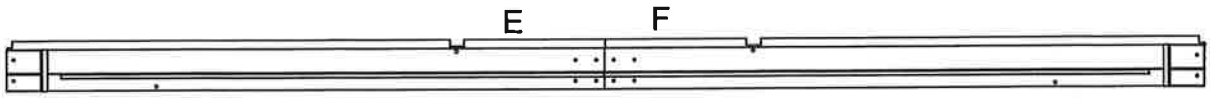

Step 2:

Insert the connectors (E1 & F1) into long crossbar (E) and long crossbar (F) and secure with bolts (AA). **Do not tight bolts completely yet.**

Repeat this step for remaining connectors (E1 & F1) and long crossbars (E & F). **This is important to align bottom holes of connectors (F1) with bottom holes of long crossbars (E & F). This care refer to a further step.**

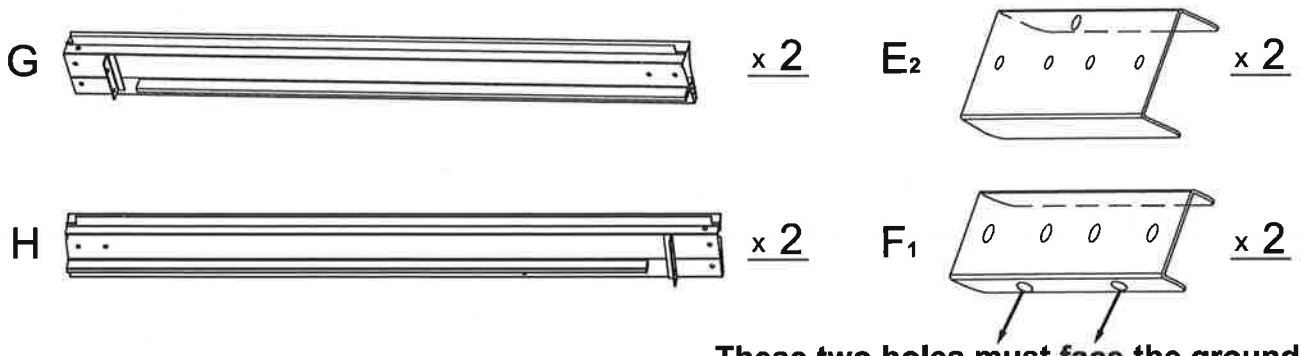

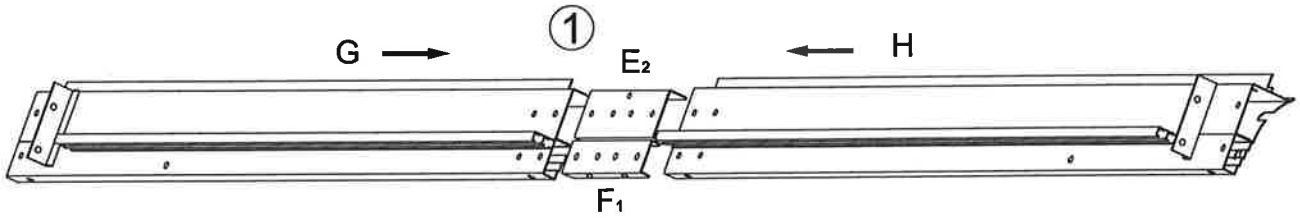

Attention!!
Extra holes for short crossbar only.

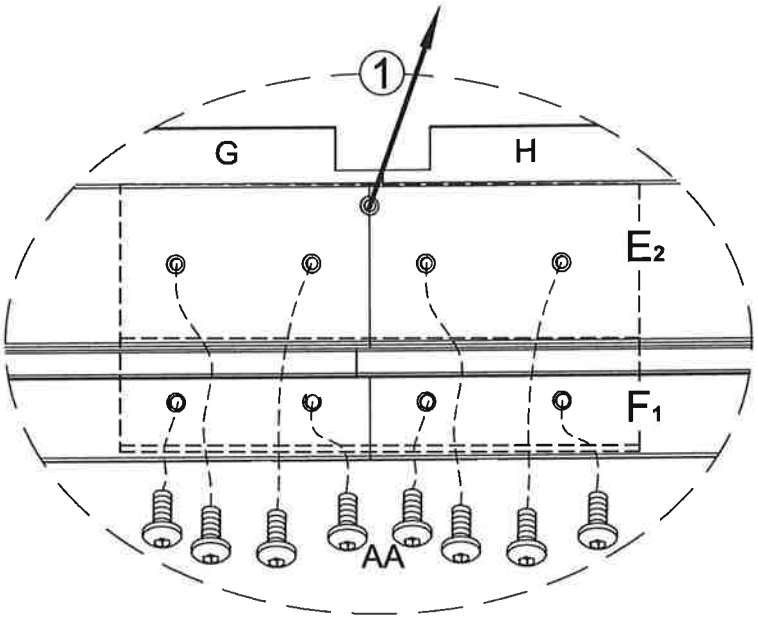

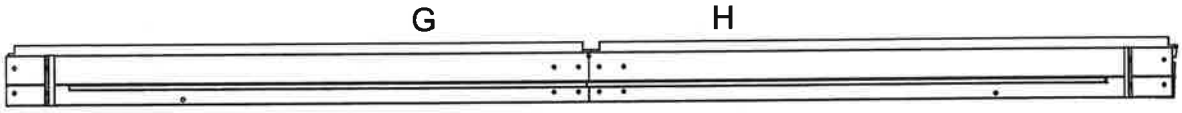

Step 3:

Insert the connectors (E2 & F1) into a short crossbar (G) and a short crossbar (H) and secure with bolts (AA). **Do not tight bolts completely yet.**

Repeat this step for remaining connectors (E2 & F1) and short crossbars (G & H). **This is important to align connectors threaded holes with short crossbars (G & H) holes. This care must either be taken to align (F1) connectors bottom holes to (G & H) short crossbars bottom holes. In both cases, this care is important and refer to a further step.**

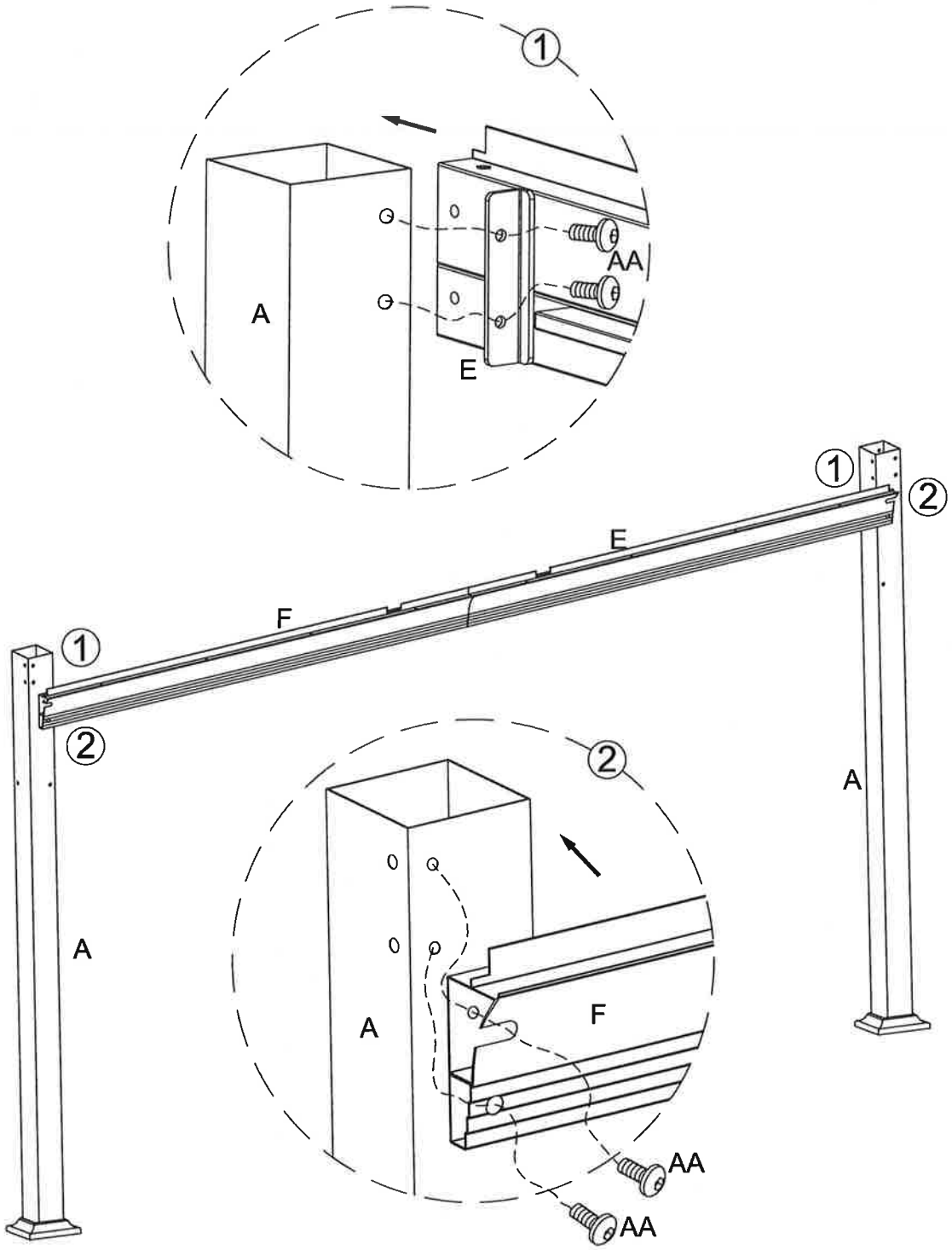

Step 4:

Secure long crossbars set (E & F) on two posts (A) by using bolts (AA).

Note fixing is done on both side of crossbars. Do not tight bolts completely yet.

Repeat on the opposite side.

Note : **For your security**, you may need two people for this step.

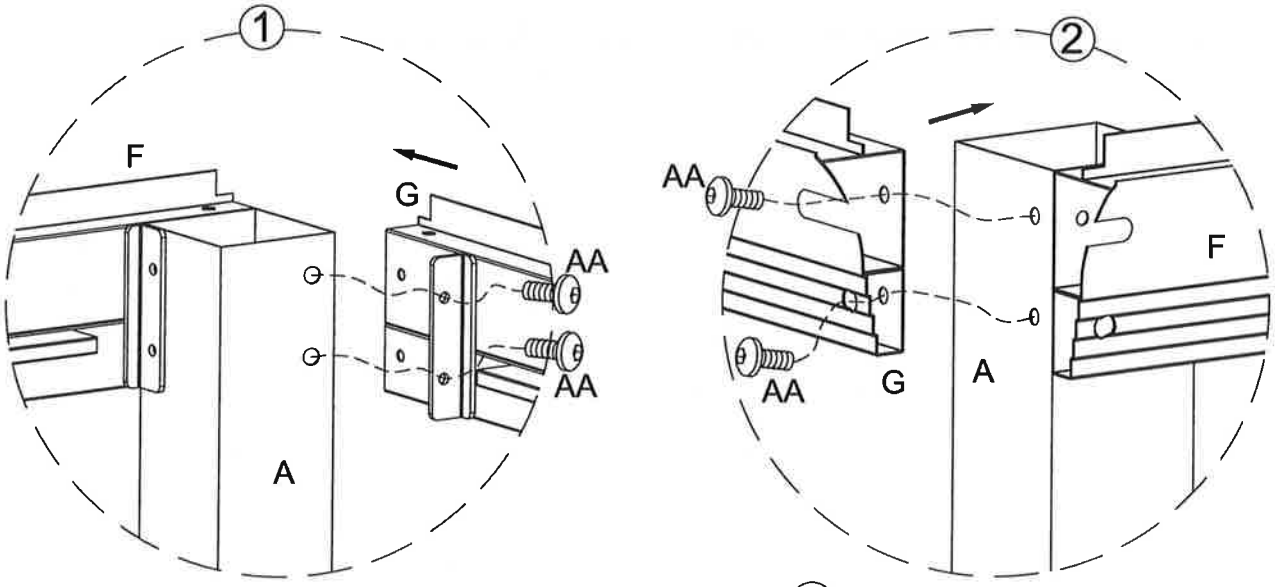

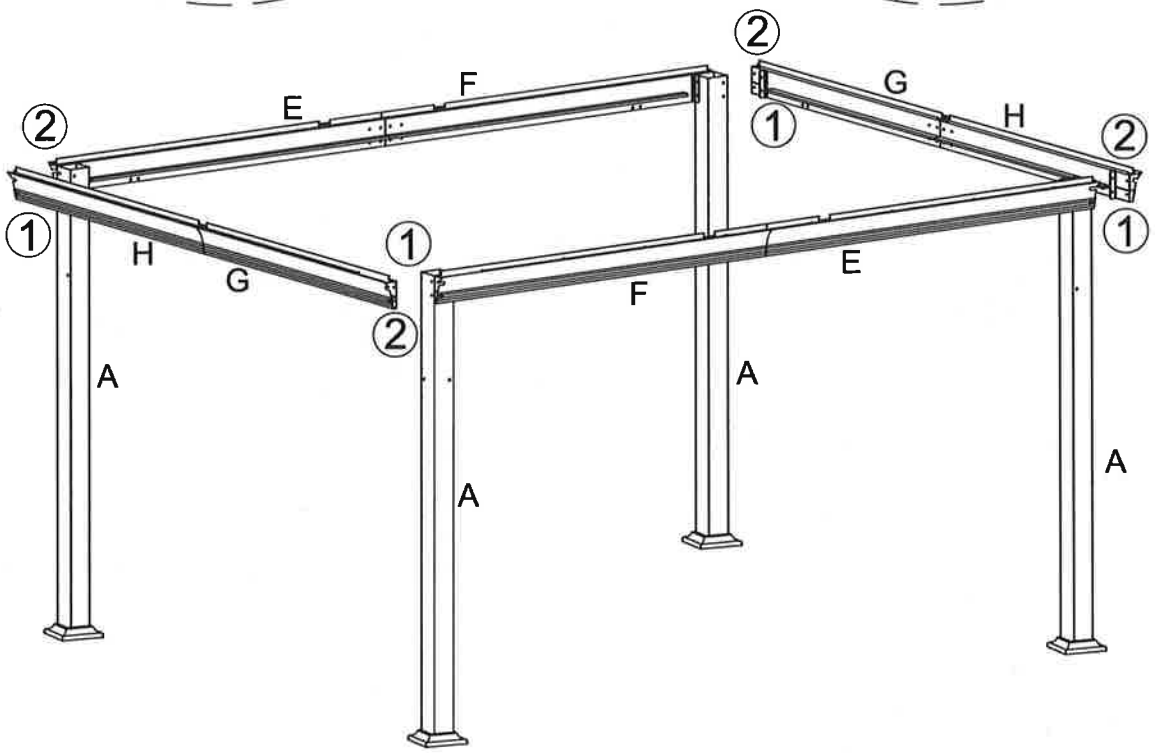

Step 5:

Secure short crossbars set (G & H) on posts (A) by using bolts (AA). **Note fixing is done on both side of crossbars (G & H).** Repeat for the opposite side.

Note:Please check above fig. carefully and make sure all the parts are in right position.

For your security, you may need 4 people for this step.

Do not tight bolts completely yet.

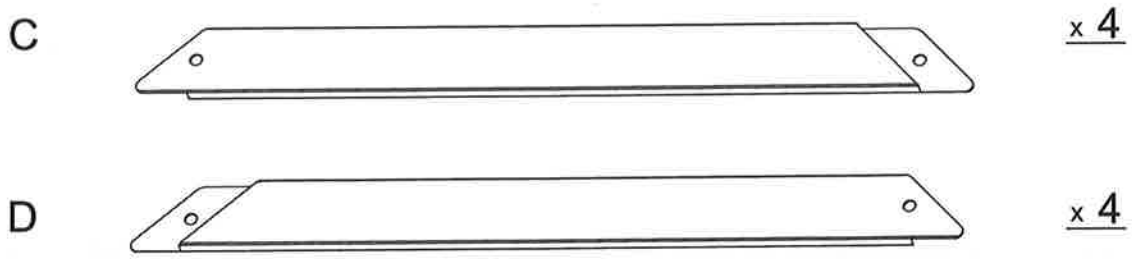

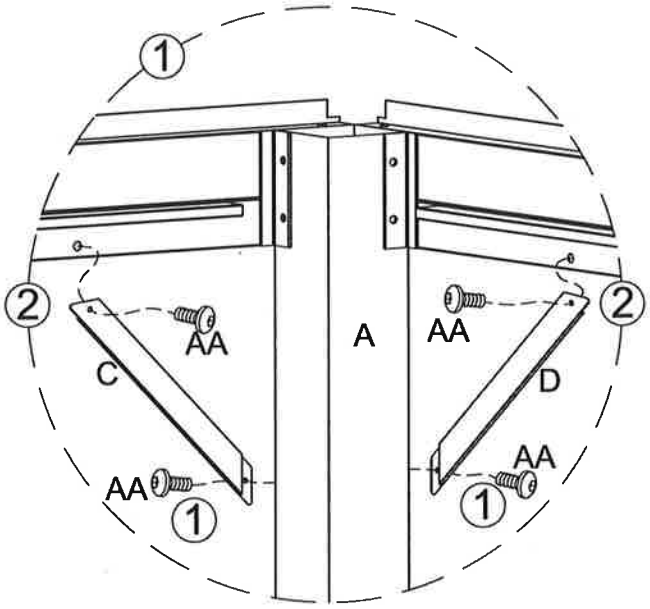

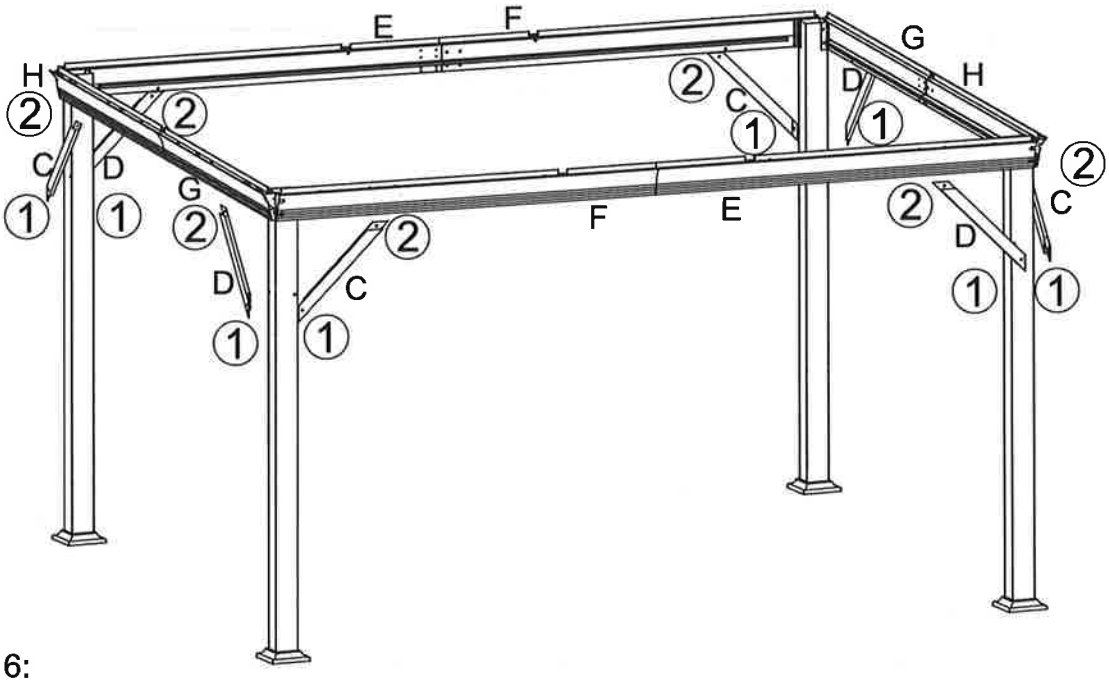

Step 6:

Secure left and right corner supporters (D & C) to posts (A) by using bolts (AA) as fig.1. Do not tight bolts yet. Then secure other end of corner supporters (D & C) to short and long assembly crossbars (EFGH) by using bolts (AA) as fig.2. Tightening must be done only once all bolts are located. Tight all loose bolts but following this sequence: external of corners, inside of corners, lower end of corner supporter then upper end. Prior tightening crossbars, ensure assembly is fully aligned.

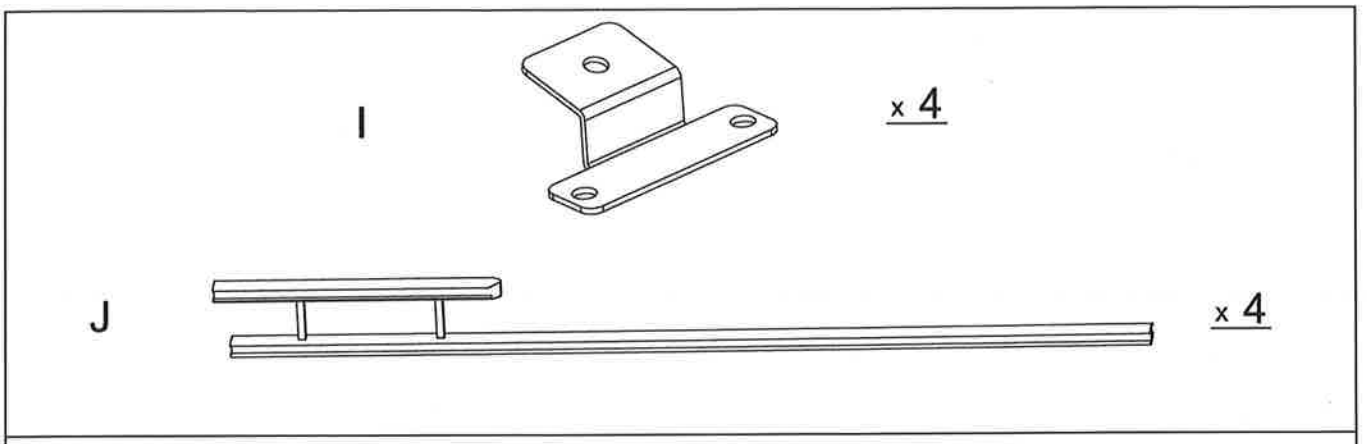

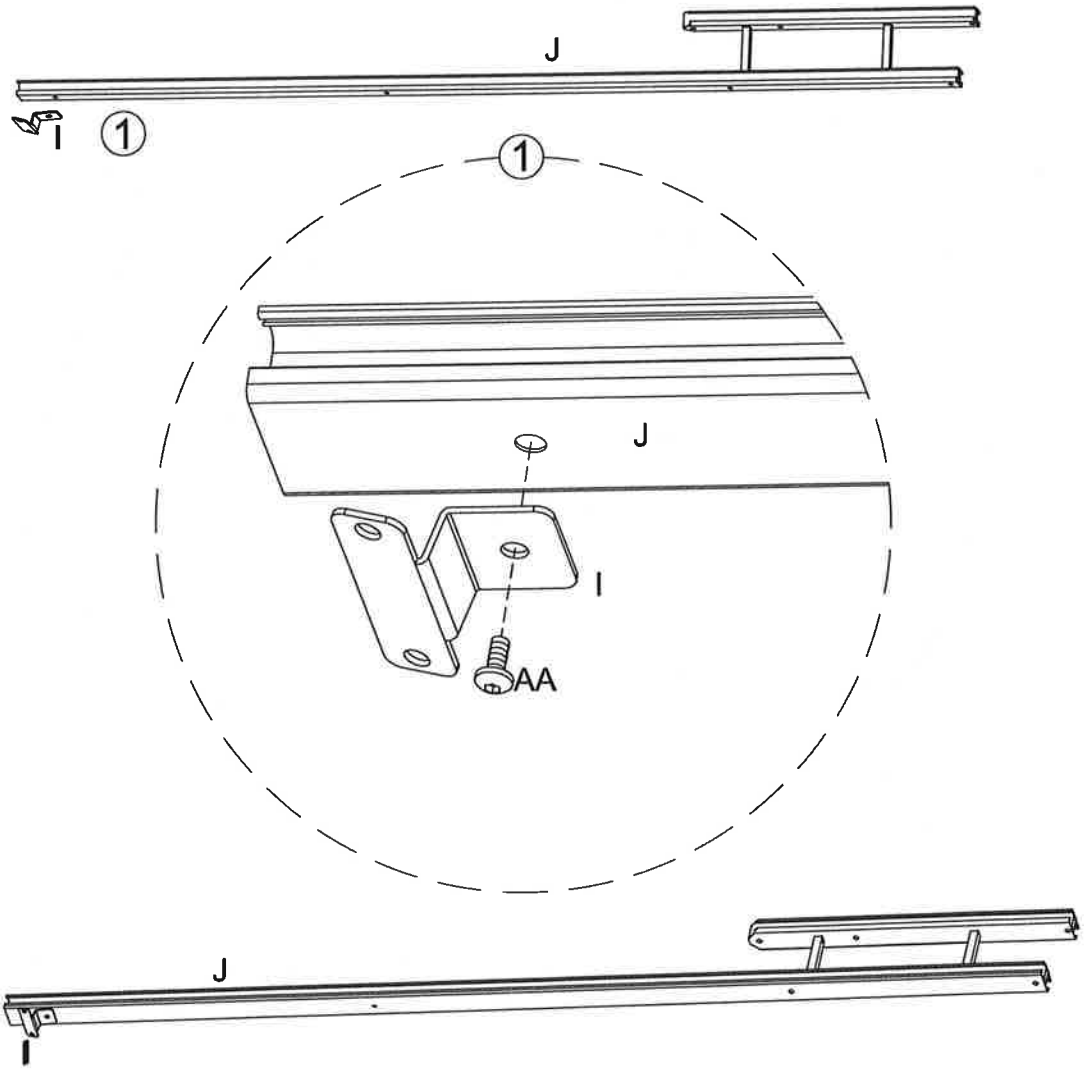

Step 7:

Insert bolt (AA) through corner connector (I), secure with the end section of corner roof tube (J), as shown in fig.1. Repeat this step for remaining corner roof tubes (J).

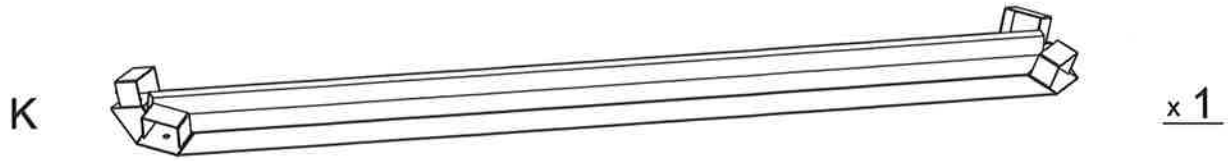

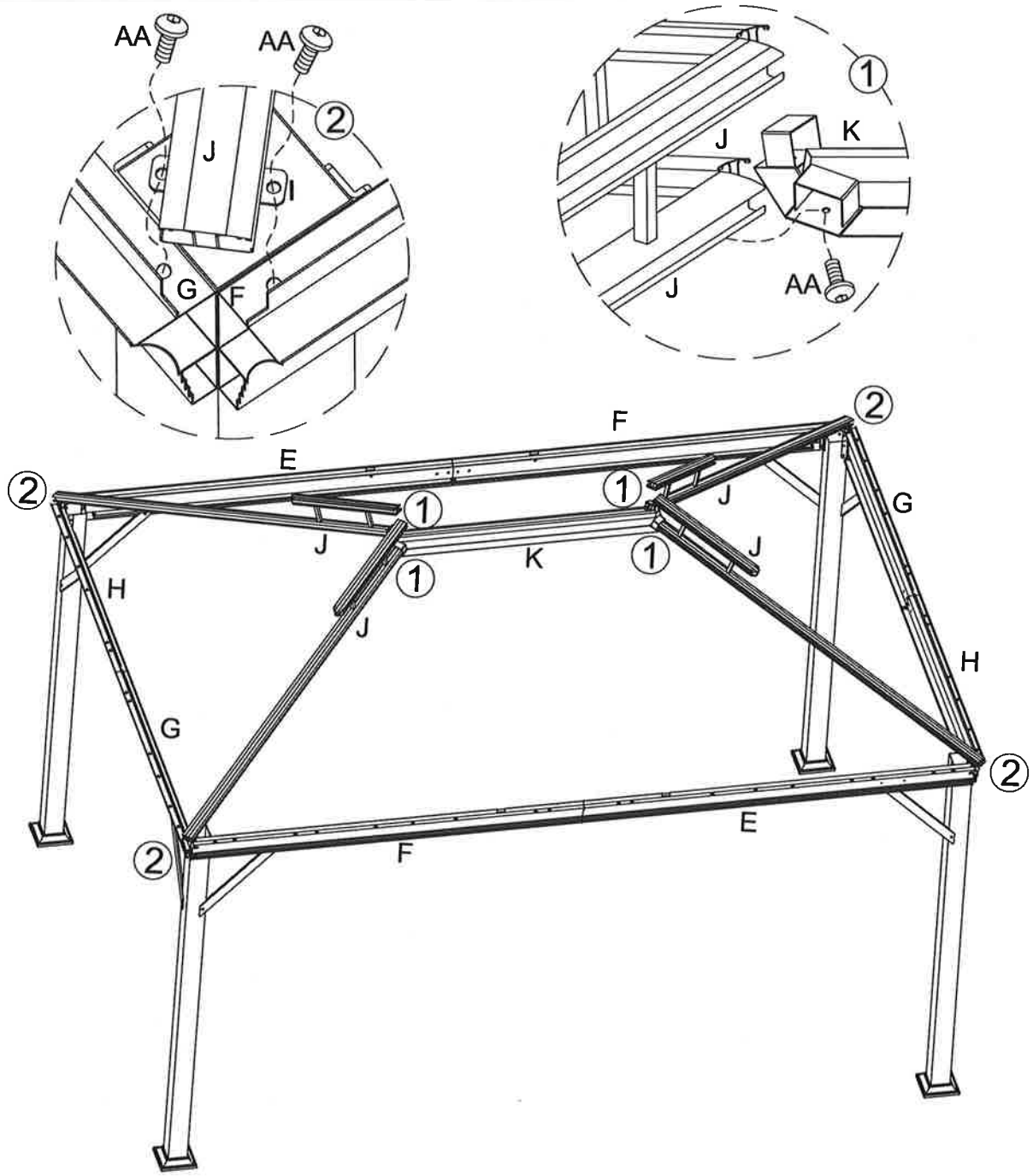

Step 8:

Secure corner roof tube (J) to roof connector (K) using bolts (AA). Do not tight bolts completely yet. Lay down the corner roof tube set (J) on crossbars four corners and secure by using bolts (AA). Tight corner bolts but not full.

P

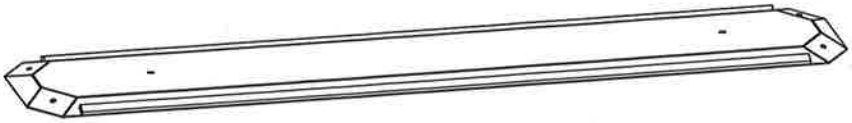

x 1

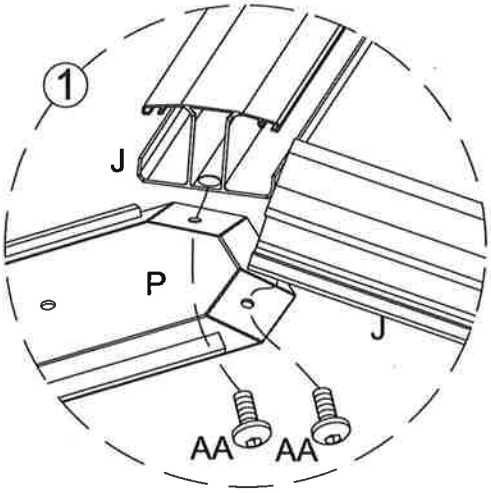

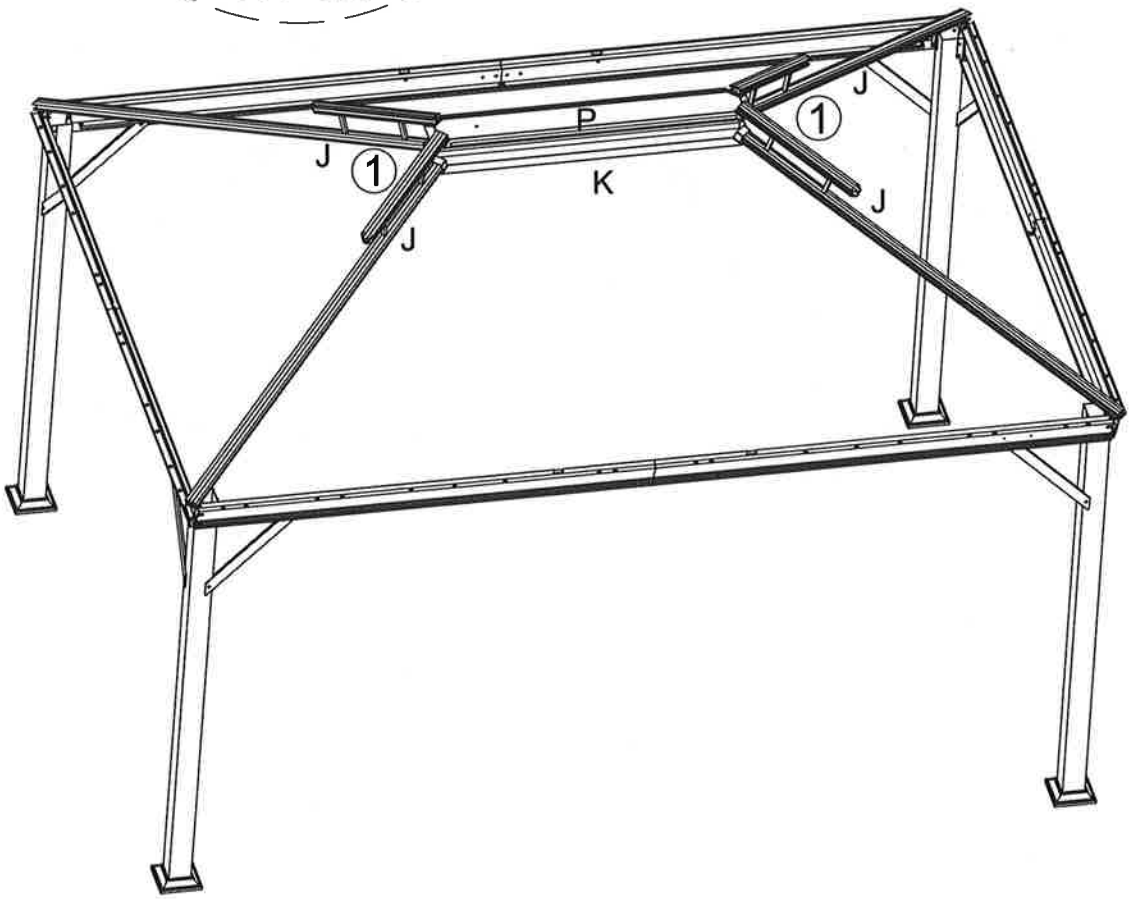

Step 9:

Secure middle connector (P) on the corner roof tube set (J) by using bolts (AA) as shown. **Tight bolts.**

Z

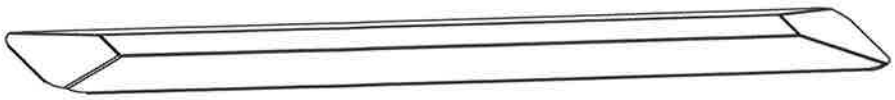

x 1

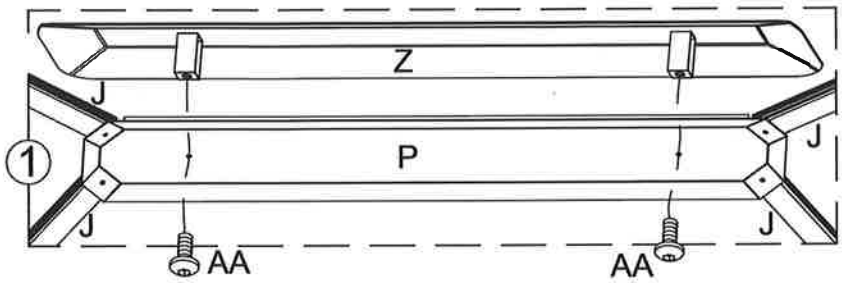

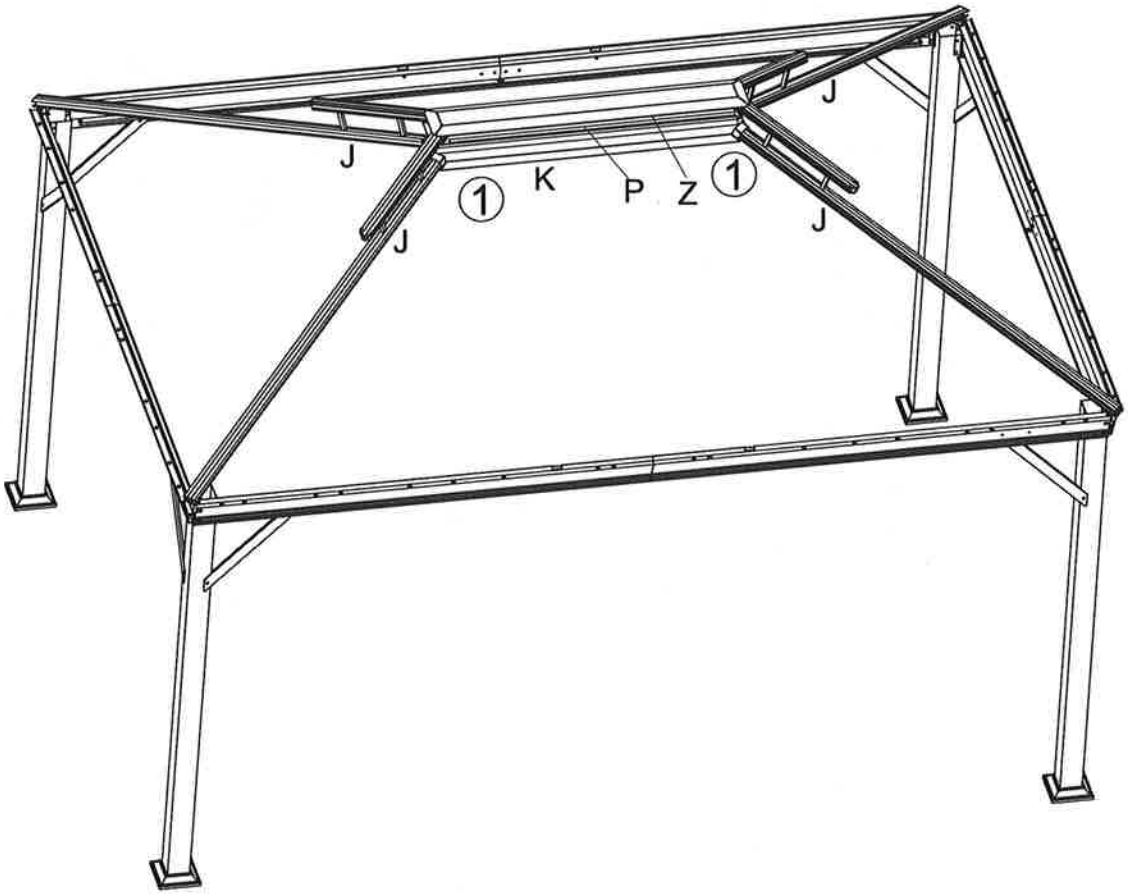

Step 10:

Insert bolts (AA) through middle connector (P), and secure with roof cap (Z) as shown. **Tight bolts.**

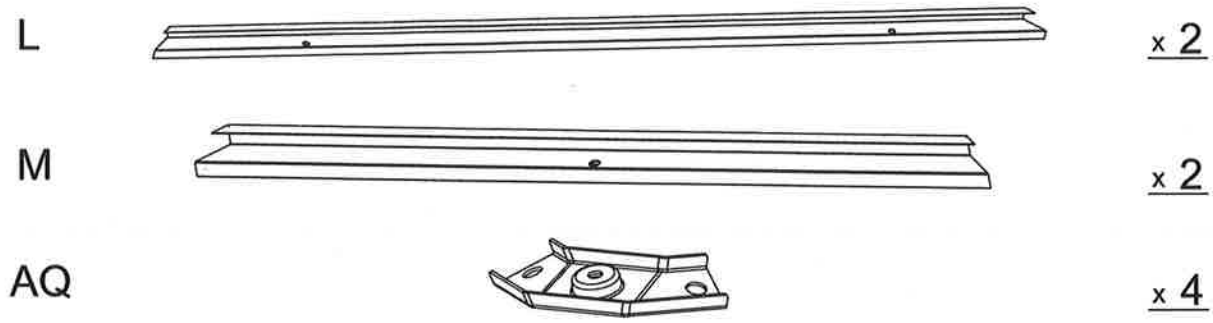

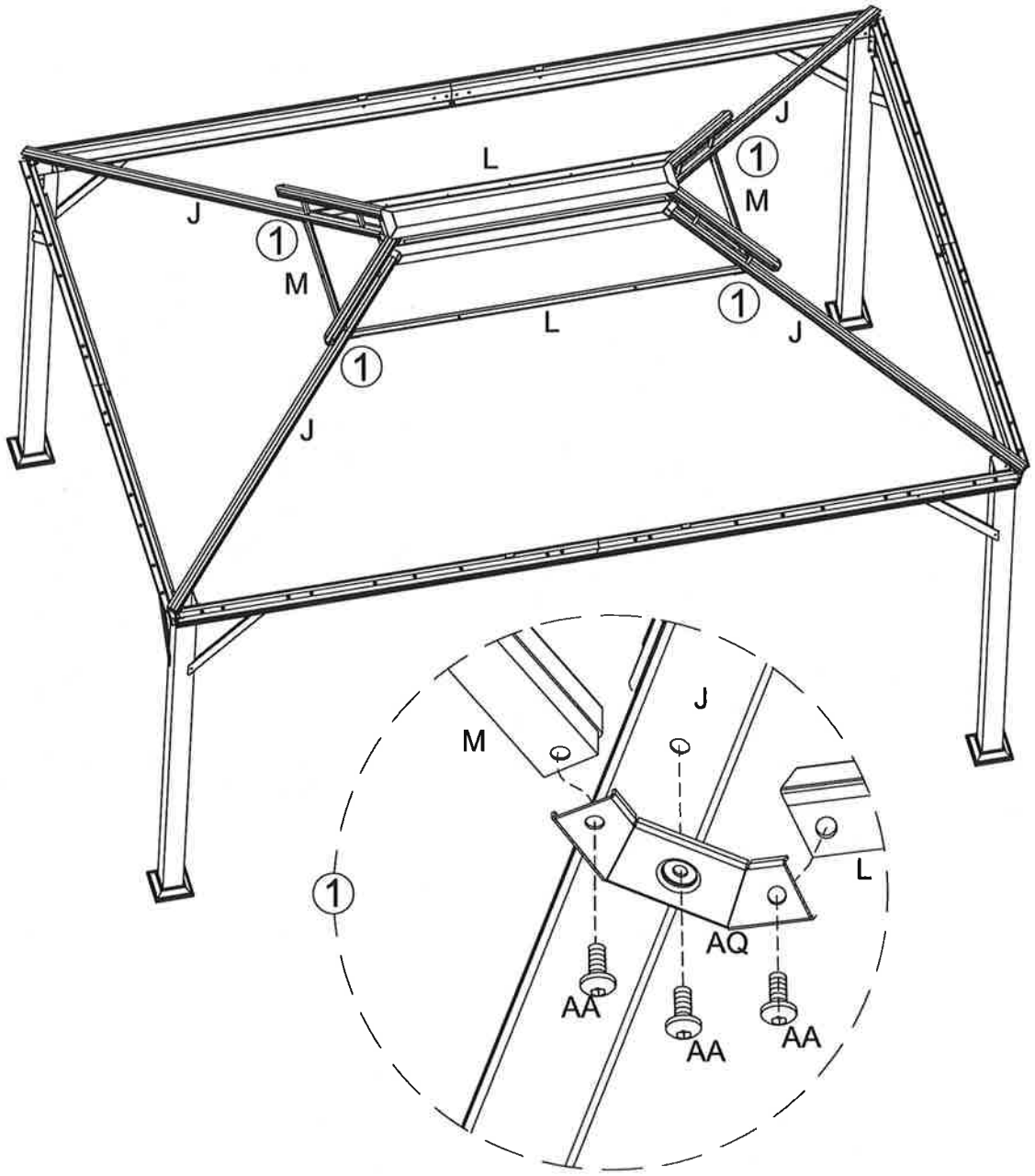

Step 11:

Secure corner connector (AQ) on the corner roof tube (J) by using bolts (AA) aling the part in position as fig.1 shown. Then,secure roof support profiles (L&M) on the corner connector (AQ) by using bolts (AA).

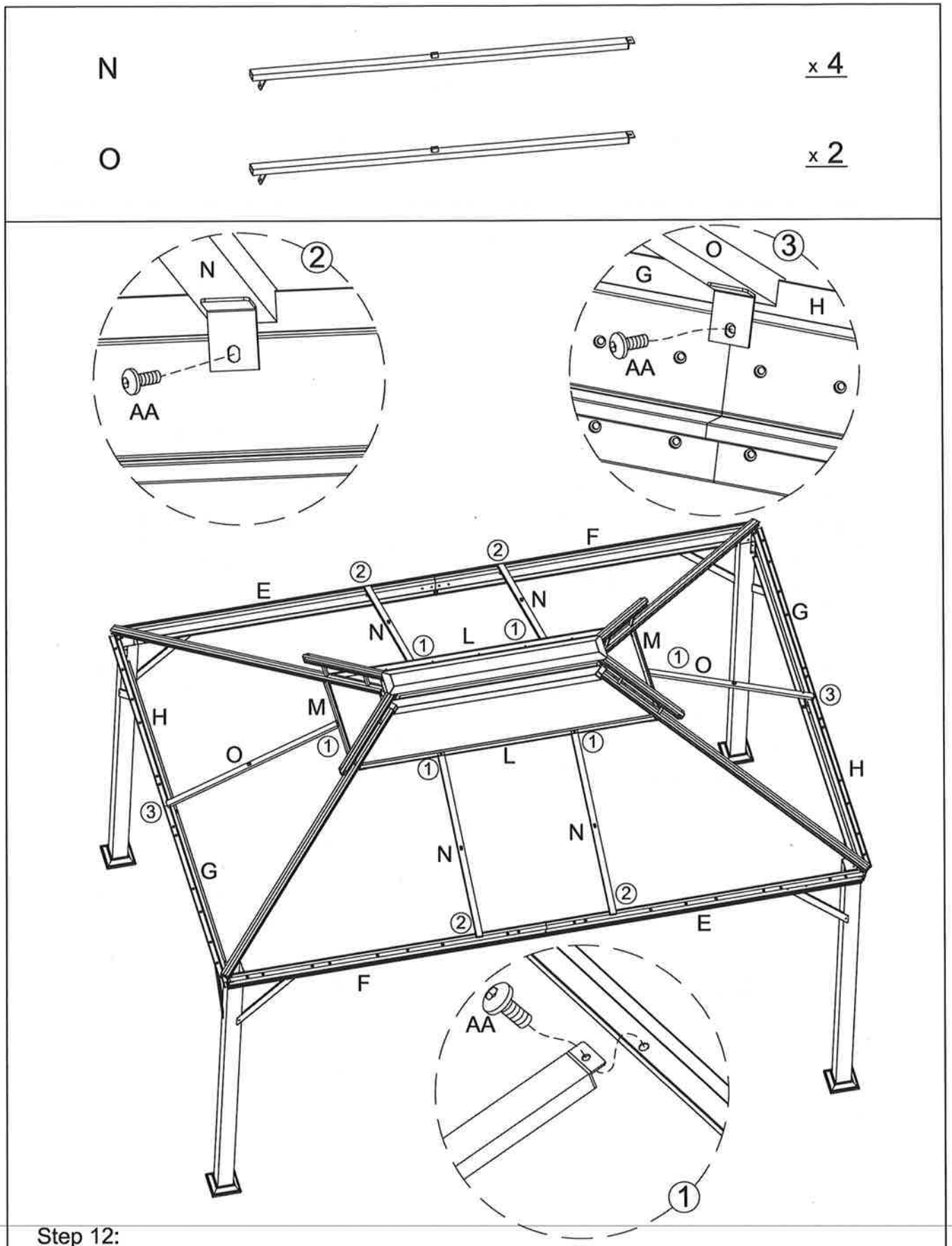

Step 12:

Secure middle roof tubes (N & O) on the roof support profiles (L & M) by using bolts (AA) as fig.1. shown. Then, **secure to the crossbars using bolts (AA) as fig.2 & 3. shown.**

Q 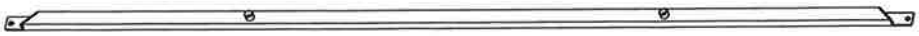 x 2

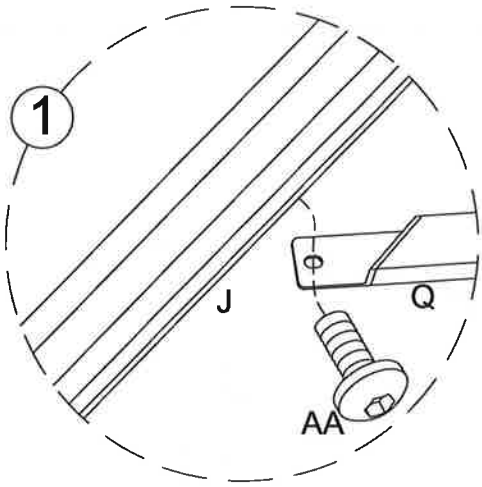

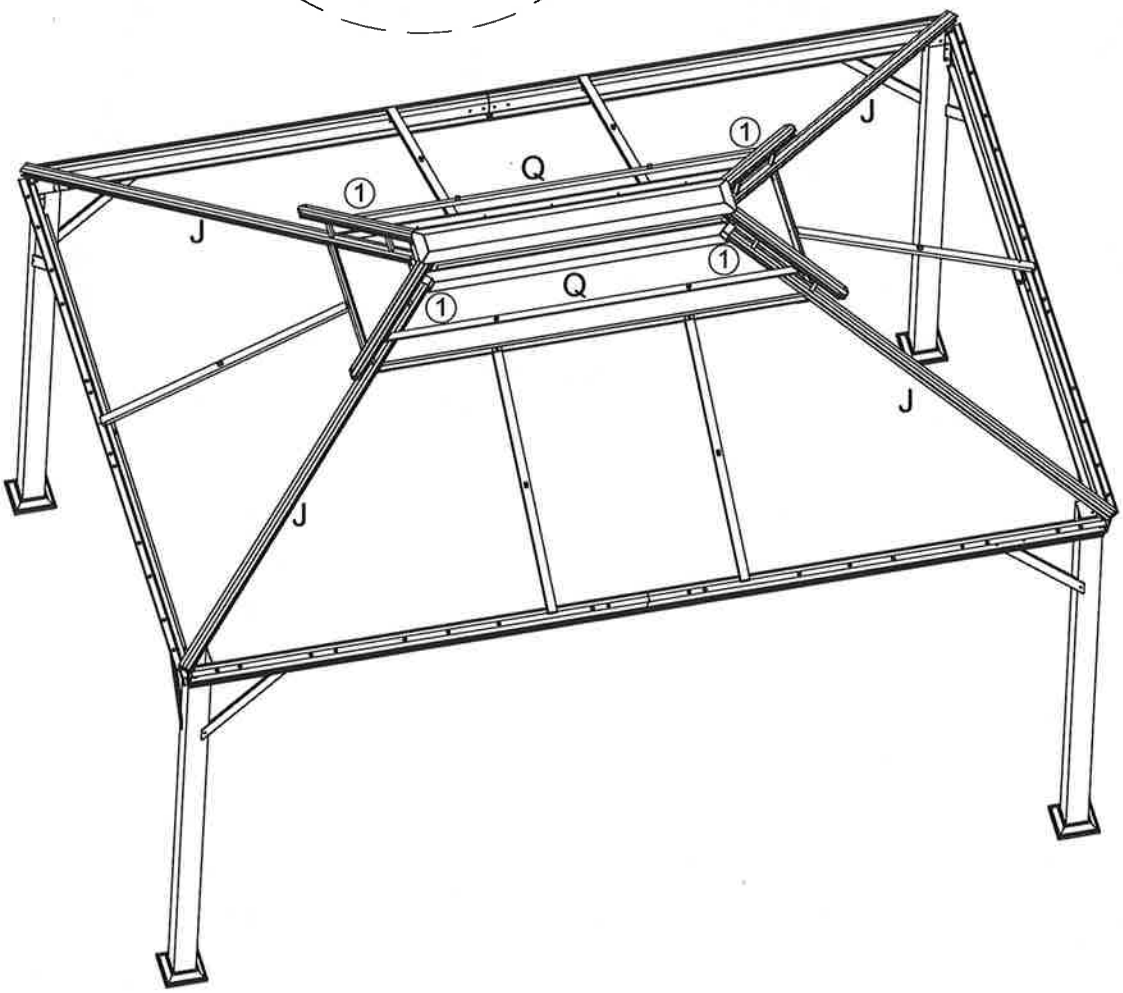

Step 13:

Secure upper roof supporting bar (Q) on the corner roof tube (J) by using bolts (AA) as fig.1. shown. Repeat for remaining upper roof supporting bar (Q) on opposite side.

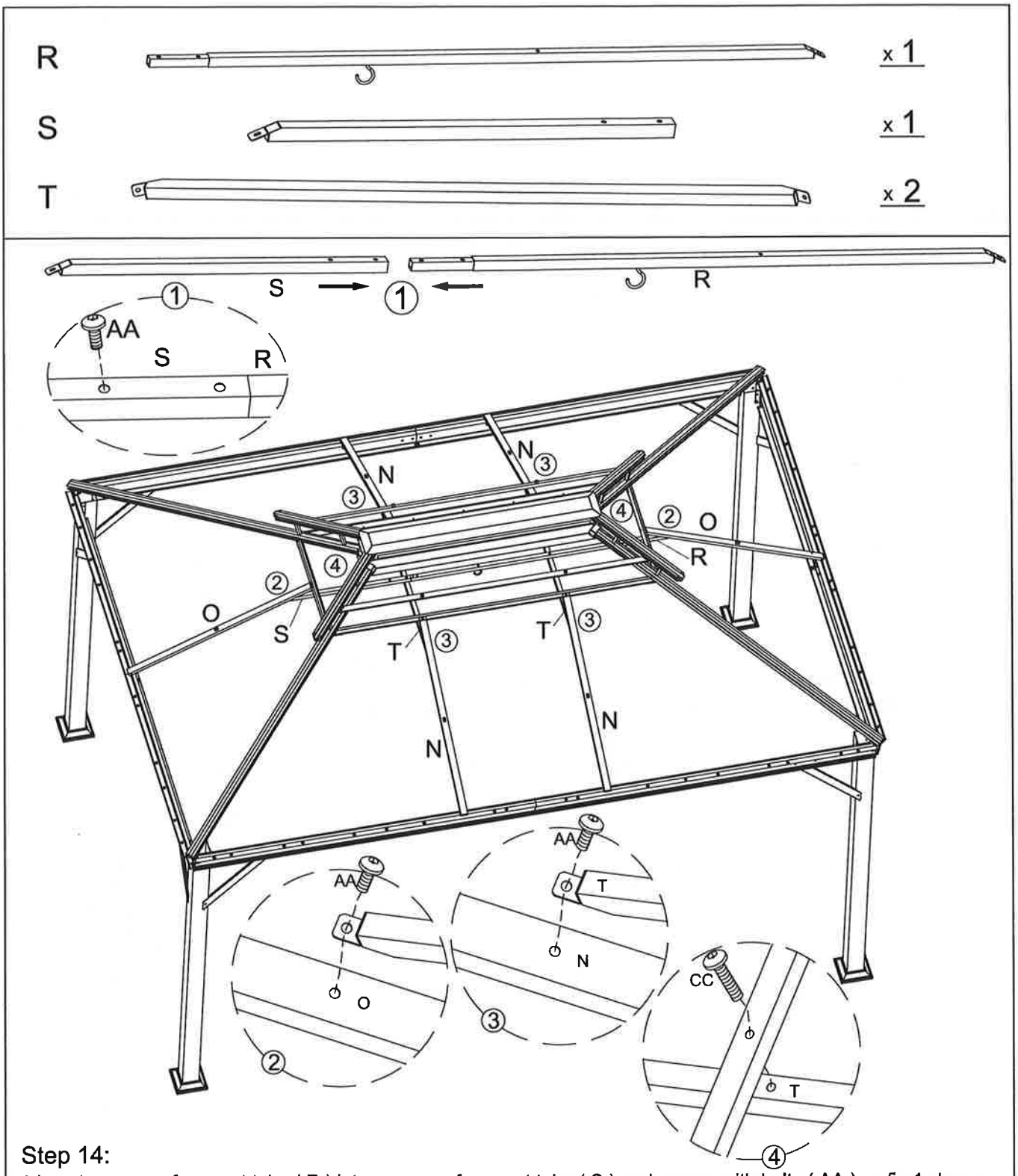

Step 14:

1.Insert upper roof support tube (R) into upper roof support tube (S) and secure with bolts (AA) as fig.1 shown.

2.Insert **bolts** (AA) through upper roof support tubes (R & S), and secure with middle roof tubes (O) as fig.2 shown.

3.Insert **bolts** (AA) through upper roof support **tubes** (T), and secure with middle roof tubes (N) as fig.3 shown.

4.Insert **bolts** (CC) through upper roof tube (T), and secure with upper roof support tubes (R & S) as fig.4 shown.

Do not tight bolts completely yet.

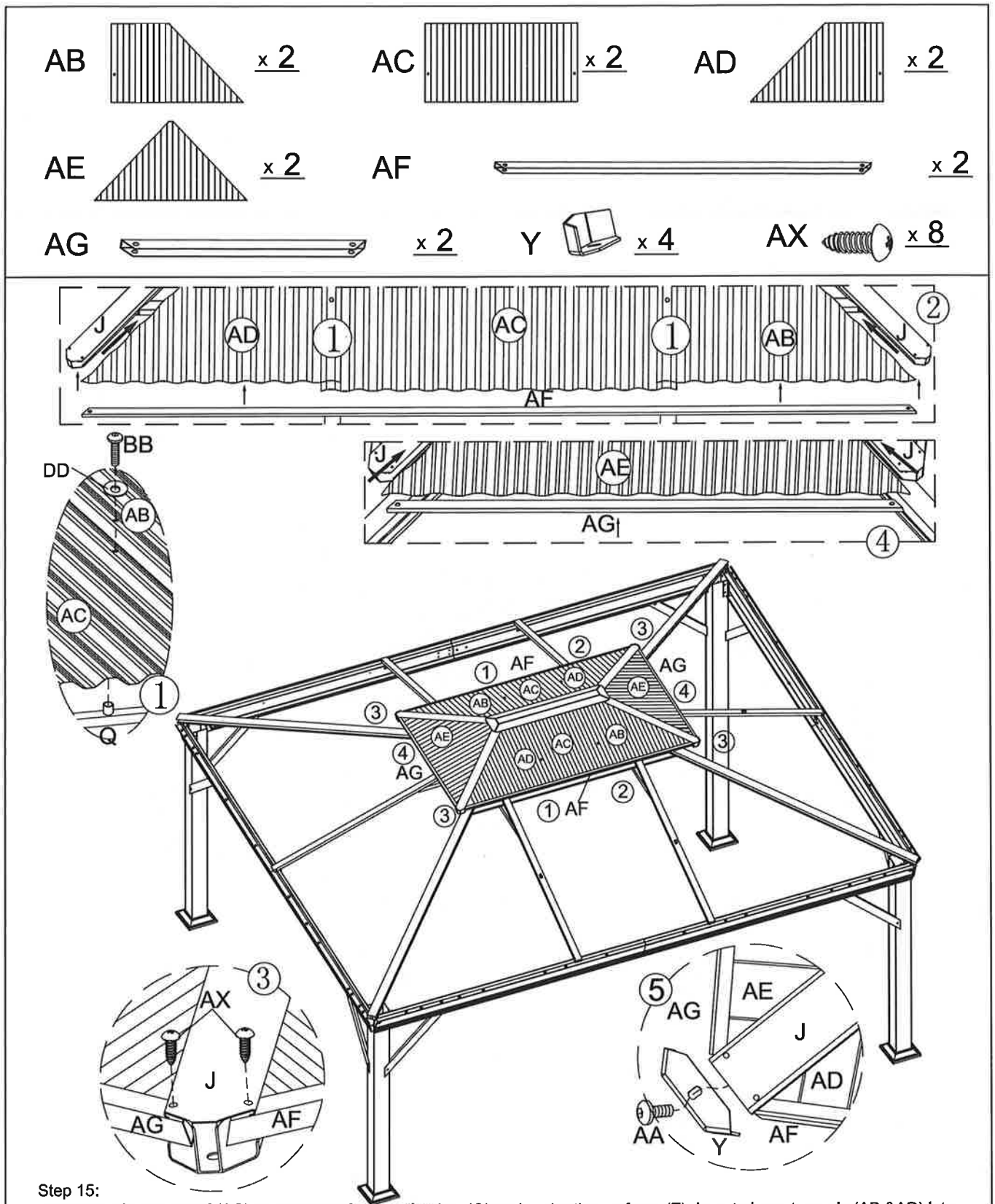

Step 15:
Lay down air vent panel (AC) on upper roof supporting bar (Q) and under the roof cap (Z). Insert air vent panels (AB &AD) into corner roof tube (J) grooves. Notice the air vent panels (AB & AD) needs to overlap with air vent panel (AC), use bolts (BB) and plastic washers (DD) to secure with upper roof supporting bar (Q) as fig.1 shown. Then insert air vent profile (AF) at the end as fig.2. shown and secure with self tapping screws (AX) as fig.3. shown.

Then insert adjacent air vent panel (AE) into corner roof tube (J) groove, and insert air vent profile (AG) at the end as fig.4. shown and secure with self tapping screws (AX) as fig.3. shown. Hold in position.Finally insert bolt (AA) through air vent corner connector(Y), secure with corner roof tube (J) as fig.5. shown. Note : Install clockwise to prevent the panels slide off.

Temporary use of adhesive tape (duct) linking roof cap (Z) to panels, makes easier this assembly step.

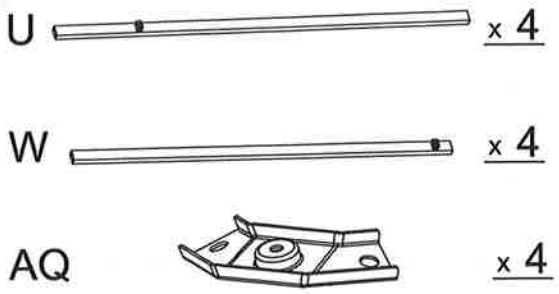

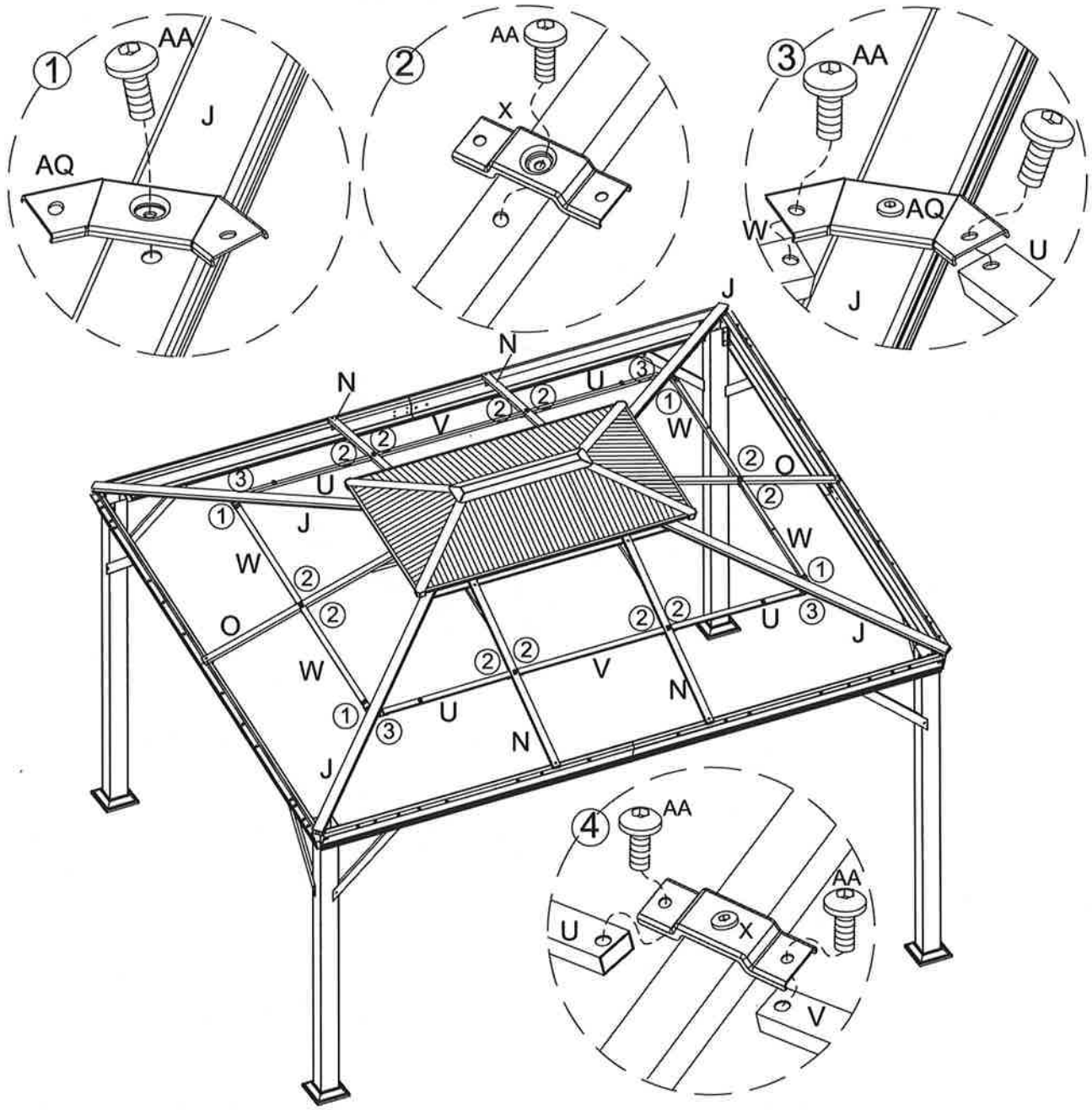

Step 16:

1. Secure corner connector (AQ) on the corner roof tube (J) by using bolt (AA) align the part in position as fig.1 shown.

2. Secure middle connector (X) on the middle roof tubes (N & O) by using bolt (AA) align the part in position as fig.2 shown.

3. Secure middle roof support tubes (U & V & W) on the middle & corner connector (X & AQ) by using bolts (AA) as fig.3 & 4 shown.

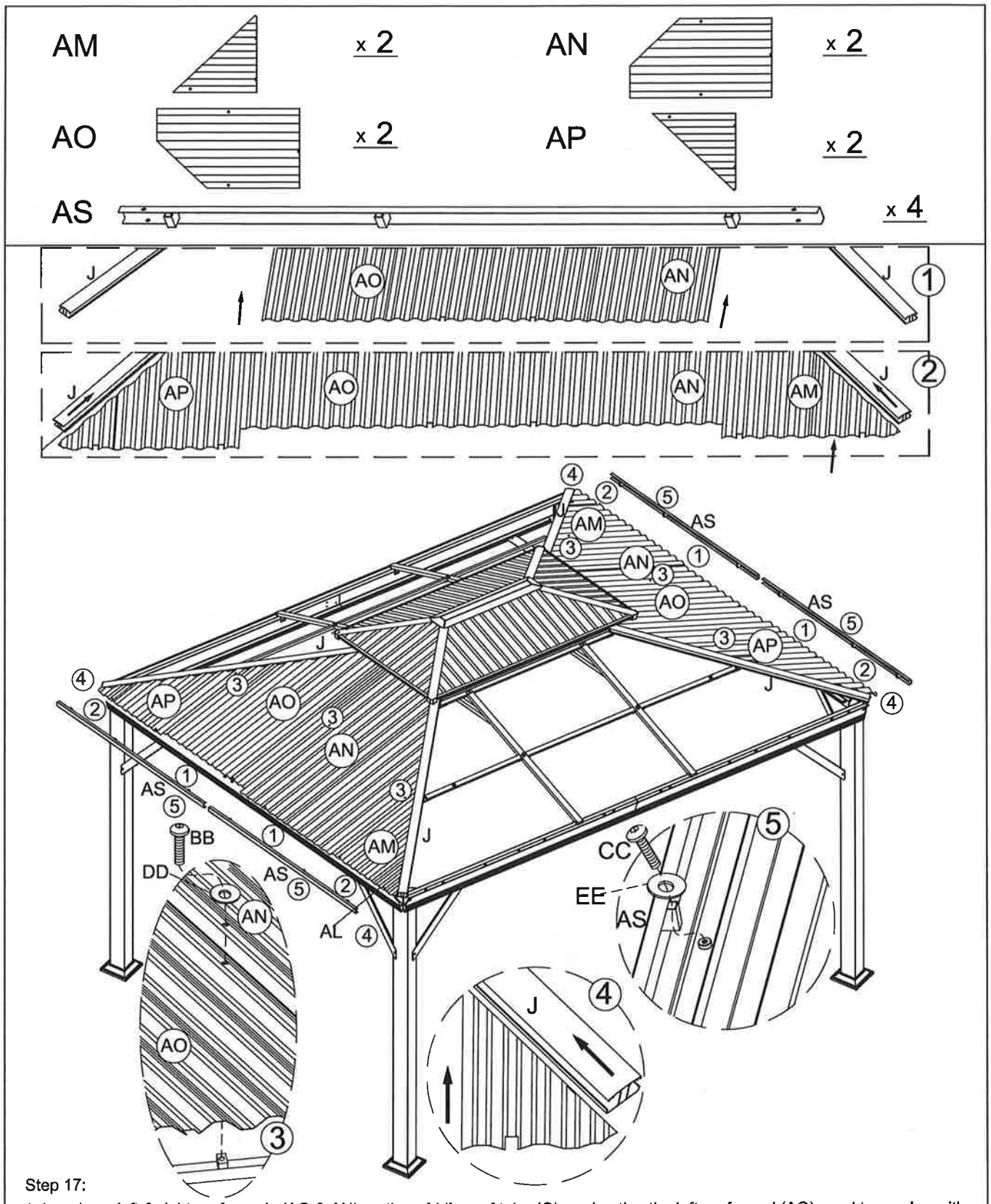

Step 17:

1. Lay down left & right roof panels (AO & AN) on the middle roof tube (O), and notice the left roof panel (AO) need to overlap with right roof panel (AN) use bolts (BB) & plastic washer (DD) to secure with middle roof tube (O) as fig. 1 & 3 shown.

2. Insert left & right roof panels (AP & AM) into the corner roof tube (J) groove and overlap with left & right roof panels (AO & AN) as fig. 2 & 4 use bolts (BB) & plastic washer (DD) to secure with middle roof support tube (W) as fig. 3 shown.

3. Insert bolts (CC) and stainless washers (EE) through eave profile (AS), secure with short crossbar set (G & H) as fig. 5 shown. Repeat the steps 1 to 3 for opposite side.

Caution: Please do not let the panels slide off.

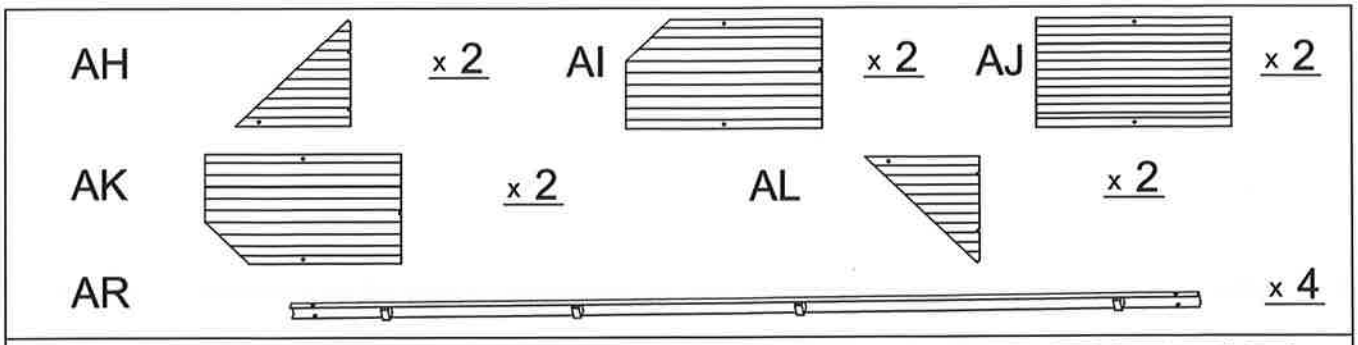

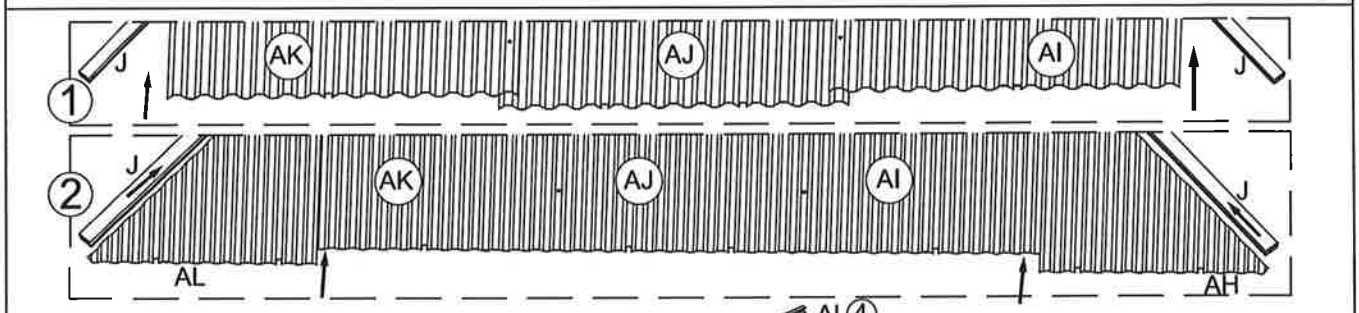

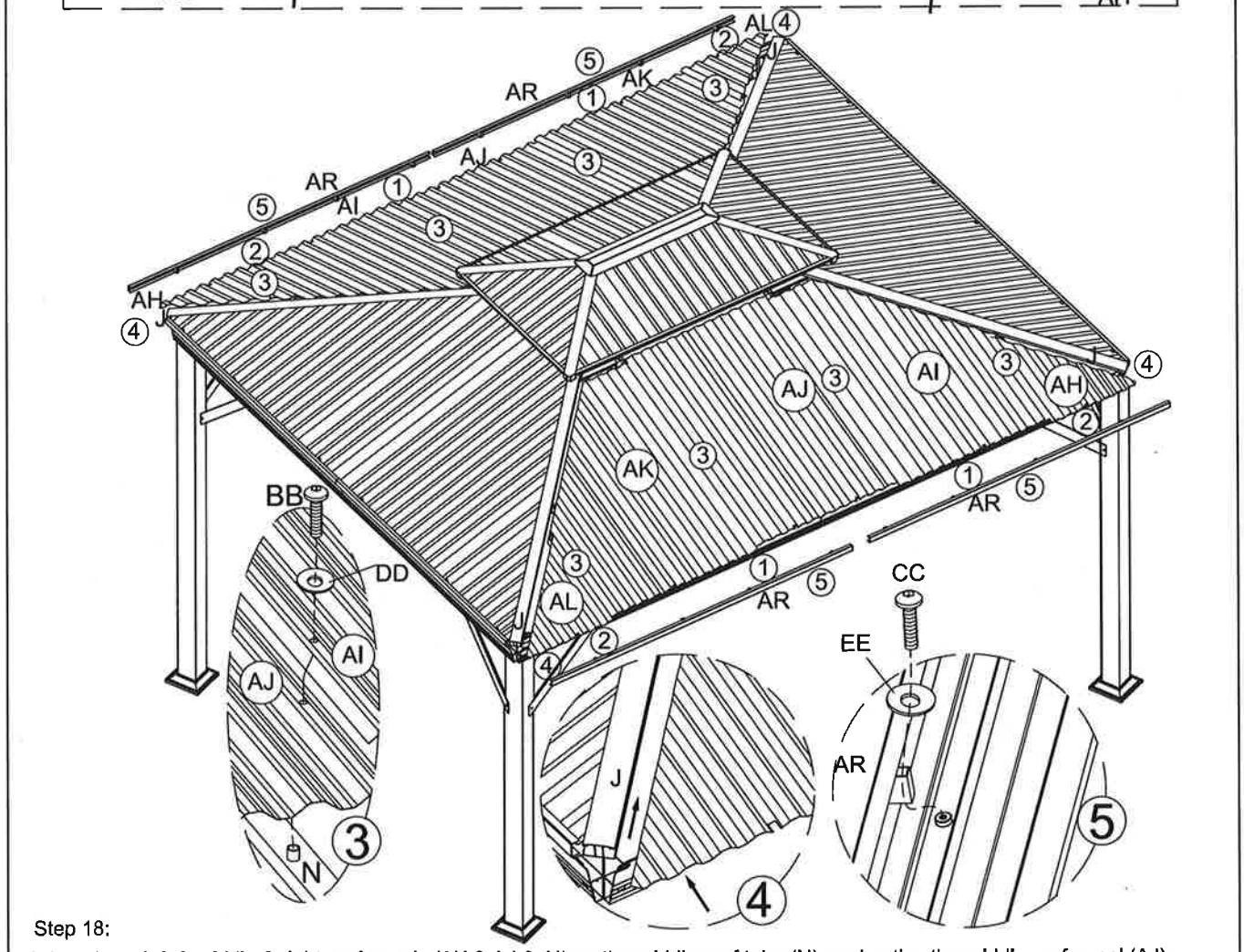

Step 18:

1. Lay down left & middle & right roof panels (AK & AJ & AI) on the middle roof tube (N), and notice the middle roof panel (AJ) need to overlap with left & right roof panel (AK & AI) use bolts (BB) & plastic washer (DD) to secure with middle roof tube (N) as fig. 1 & 3 shown.

2. Insert left & right roof panels (AL & AH) into the corner roof tube (J) groove and overlap with left & right roof panels (AK & AI) as fig. 2 & 4 use bolts (BB) & plastic washer (DD) to secure with middle roof support tube (U) as fig. 3 shown.

3. Insert bolts (CC) and stainless washers (EE) through eave profile (AR), secure with long crossbar set (E & F) as fig. 5 shown. Repeat the steps 1 to 3 for opposite side.
Caution: Please do not let the panels slide off.

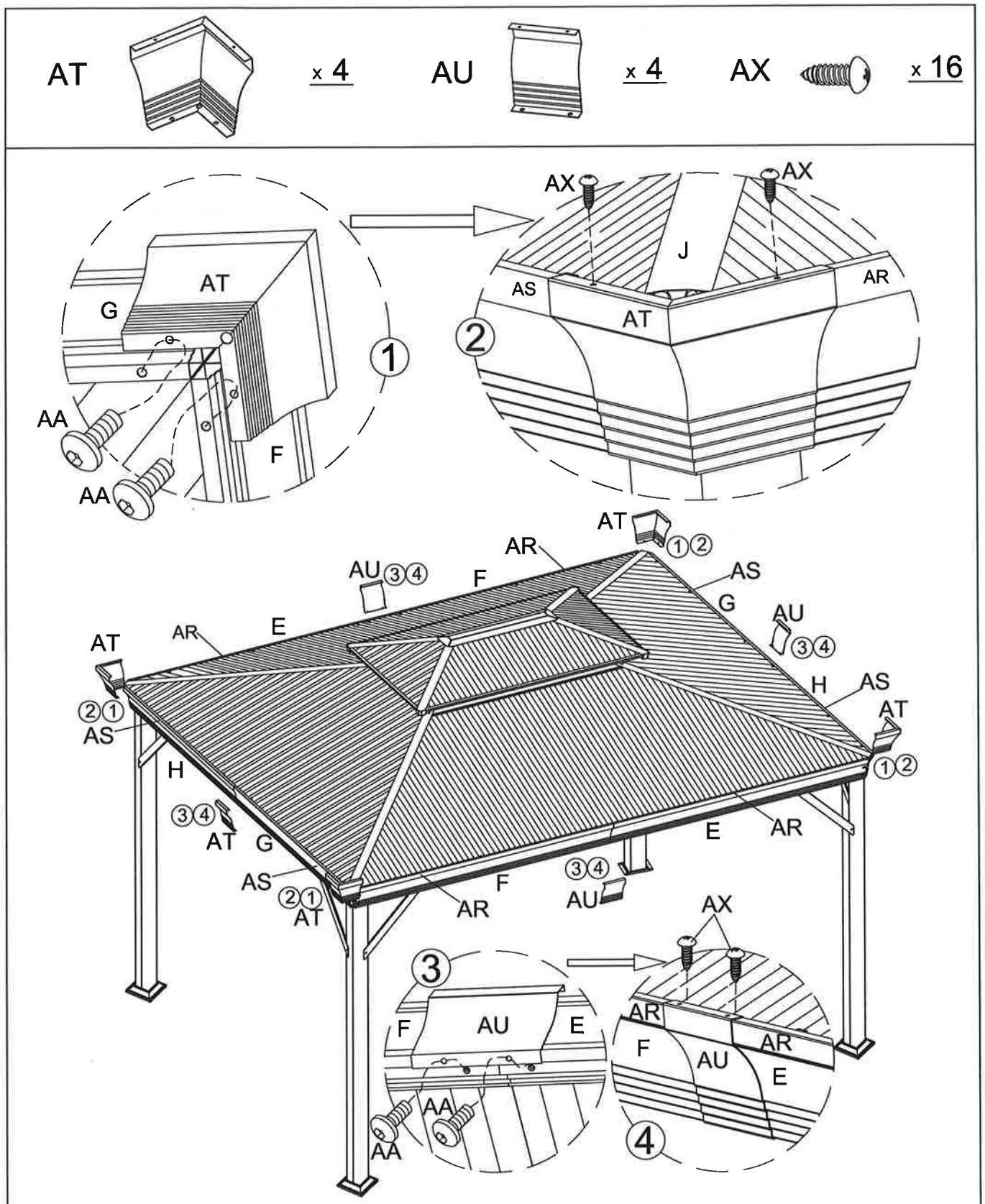

Step 19:

1.Insert bolts (AA) through corner moulding (AT), and secure at corner of crossbars as fig.1. shown. Then insert self tapping screws (AX) at corner of crossbars as fig.2 shown. Repeat for remaining 3 corners of crossbars.

2.Insert bolts (AA) through center moulding (AU), and secure at center of crossbar as fig.3. shown. Then insert self tapping screws (AX) at center of **crossbars** as fig.4. shown. Repeat for remaining 3 sides of crossbars.

Tight all untighten bolts completely.

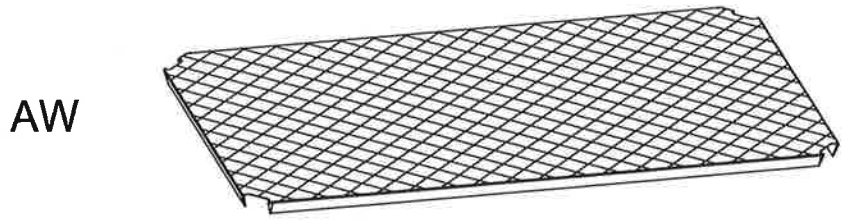

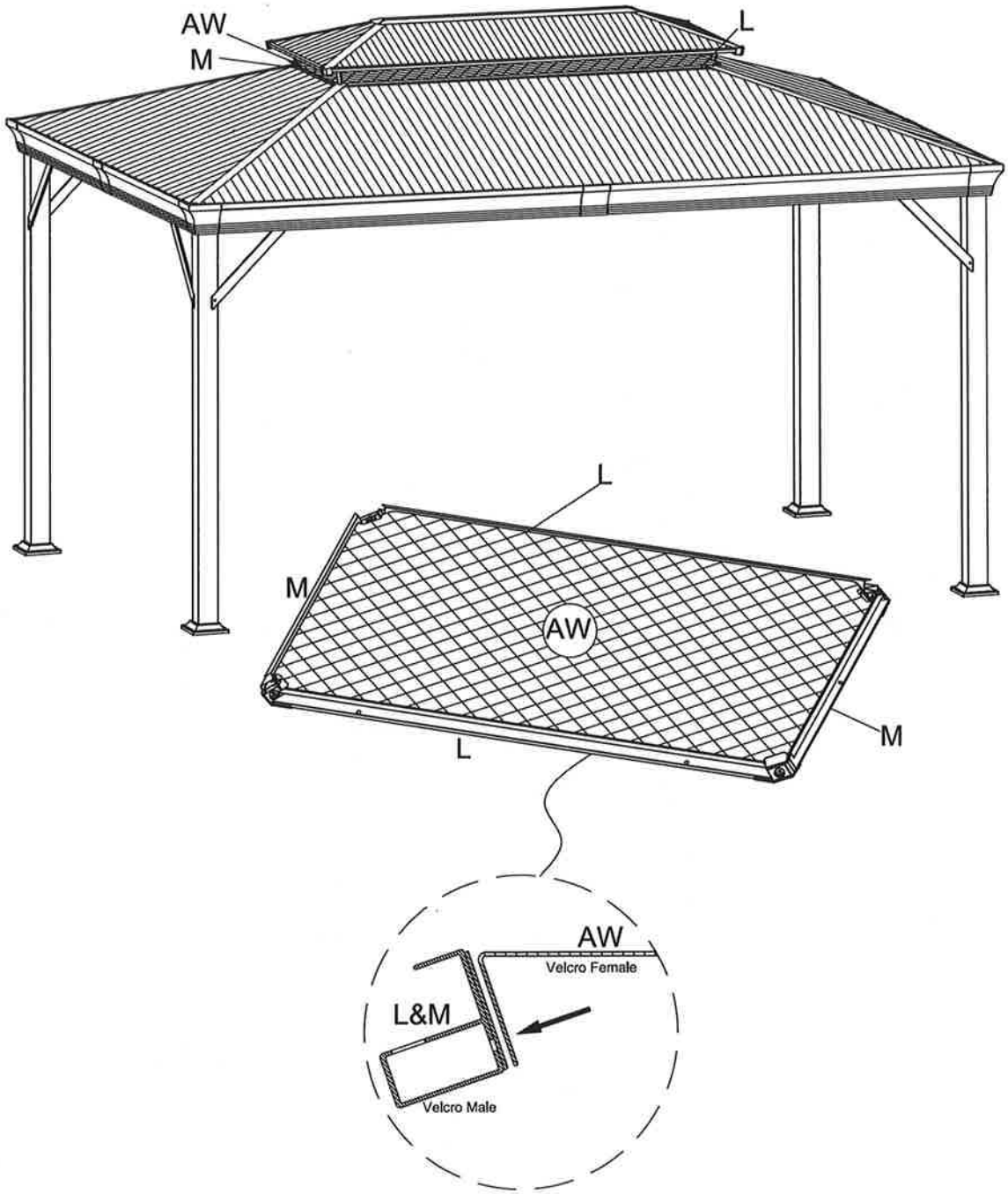

Step 20:

Hang air vent mosquito net (AW) on the roof support profile (L & M) by fitting velcro Male & Female properly as fig.1. shown .

AV 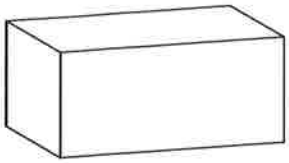 x 1

AY x 16

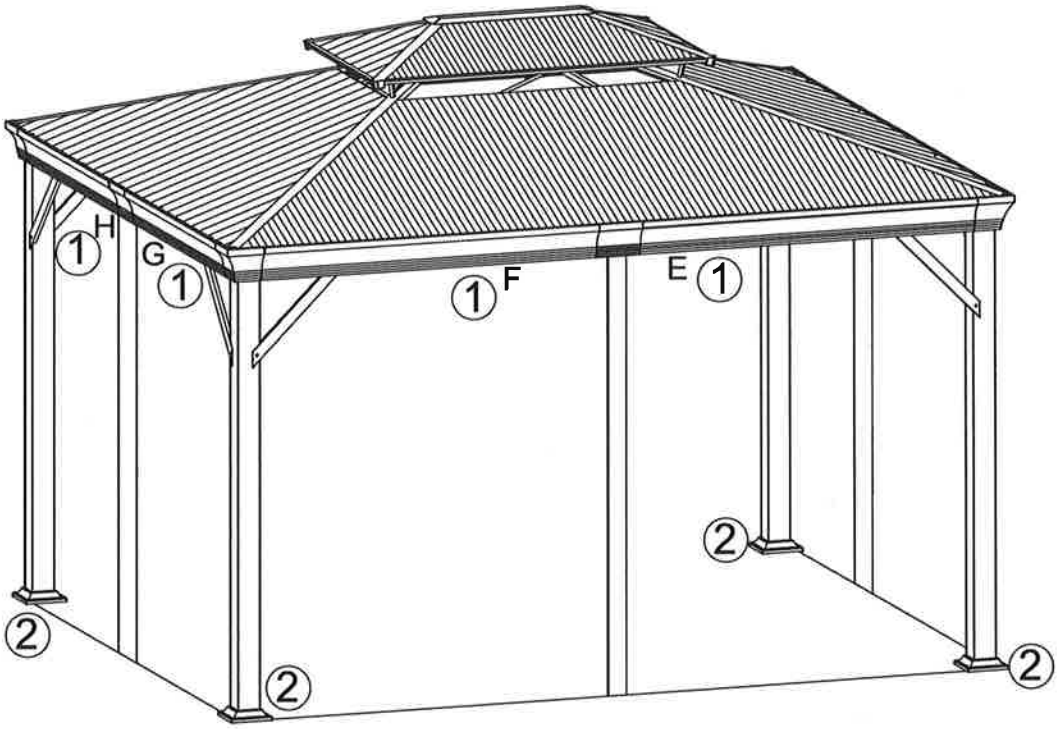

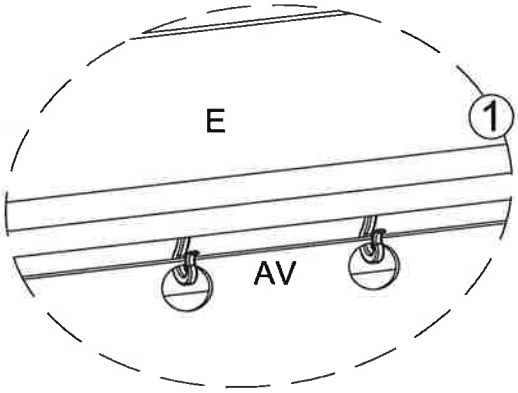

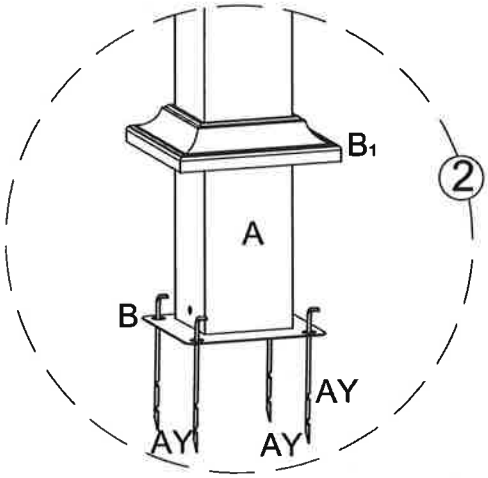

Step 21:

1.Hang the mosquito net (AV) by hooks properly.

2.Secure stakes (AY) through base flange (B) into the ground.

Depend of patio surface, use proper anchoring devices. Anchors not supplied.

3.Remove all gazebo assembly stickers.

Please ensure posts and ground are perpendicular wich each other once the unit is assembled. Tighten all bolts evenly. Enjoy your leisure time with gazebo.